भारत सरकार
अन्तरिक्ष विभाग
सतीश धवन अंतरिक्ष केन्द्र
शार
श्रीहरिकोटा डा.घ.524124 आं.प्र. भारत
टेलिफोन:+91 8623 225023
फेक्स: +91 8623 225170

Government of India
Department of Space
Satish Dhawan Space Centre
SHAR
SRIHARIKOTA P.O. 524124, AP, INDIA
Telephone: +91 8623 225023
Fax: +91 8623 225170

GOVERNMENT OF INDIA :: DEPARTMENT OF SPACE
SATISH DHAWAN SPACE CENTER SHAR :: SRIHARIKOTA – 524 124
SRI POTTI SREERAMULU.NELLORE DISTRICT (A.P)

TENDER NOTICE NO. SDSC SHAR/HPS/PT/10/2015-16

On behalf of President of India, Head Purchase and Stores, SDSC SHAR, SRIHARIKOTA invites **on line quotations** for the following:

Sl No	Ref. No.	Description	Qty.	Tender Fee
01	SHAR SPP 2015 00 3131 e-procurement [Two Part basis]	Fabrication, Transportation, Erection & Commissioning of Working Platform	1 No.	No Tender fee shall be applicable for tenders submitted through EGPS
02	SHAR SP 2015 00 3140 e-procurement [Two Part basis]	Fabrication, Testing, Supply & Alignment with Mixer at SDSC SHAR of Jacketed Vessels (Bowls)	6 Nos.	
03	SHAR MH 2015 00 3249 e-procurement [Two part basis]	Fully Automated Biochemistry Analyzer	1 No.	
04	SHAR VAST 2015 00 3254 e-procurement [TWO part basis]	Material Procurement, Fabrication, Supply, Erection & Commissioning of FCVRP Replaceable parts of SSAB at SDSC SHAR, Sriharikota	1 Lot	
05	SHAR CMD 2015 00 3258 e-procurement [SINGLE part basis]	Supply & Fixing of RO & Water Coolers at SDSC SHAR, Sriharikota	1 LS	

Last Date for downloading of tender documents : 28.12.2015 at 16:00 hrs.
Due Date for submission of bids online : 28.12.2015 at 16:00 hrs.
Due Date for Bid Sealing on : 28.12.2015 at 16:01 hrs. to 28.12.2015 at 17.30 hrs.
Due Date for Open Authorization : 28.12.2015 at 17.31 hrs. to 30.12.2015 at 17:00 hrs.
Due Date for opening of tenders : 31.12.2015 at 14:30 hrs.

Instructions to Tenderers:

01. For full details/scope of work and terms and conditions etc., please see the enclosed annexures.

02. Interested tenderers can download the e-tender from ISRO e-procurement website https://eprocure.isro.gov.in and submit the offer on line in the e-procurement portal. Offers sent physically by post/courier/in person will not be considered.

03. Tender documents are also available on ISRO website **www.isro.org; ISRO** e-procurement website **https://eprocure.isro.gov.in** and SDSC SHAR, Sriharikota website **www.shar.gov.in.** The same can be down loaded and offer submitted on line in the e-procurement portal.

04. Quotations received after the due date/time will not be considered.

05. The tender documents are available for download upto **28.12.2015 at 1600 hrs** and **last date for submission of tenders on line 28.12.2015 at 1600 hrs. and Tender Opening on 31.12.2015 at 14:30 hrs.**

06. Head, Purchase and Stores, SDSC-SHAR, Sriharikota reserves the right to accept or reject any/or all the quotations.

DT: 09.11.2015 HEAD, PURCHASE AND STORES

ANNEXURE T0 INDENT NO: SHAR/VAST/2015003254

MATERIAL PROCUREMENT, FABRICATION, SUPPLY, ERECTION AND COMMISSIONING OF FCVRP REPLACEABLE PARTS OF SSAB

GENERAL SPECIFICATIONS

OWNER : INDIAN SPACE RESEARCH ORGANISATION

PROJECT : FCVRPS FOR SOLID STAGE ASSEMBLY BUILDING (SSAB), SLP

LOCATION : SDSC-SHAR, SRIHARIKOTA

SOLID STAGE ASSEMBLY BUILDING
SECOND LAUNCH PAD
VEHICLE ASSEMBLY AND LAUNCH FACILITIES
SATISH DHAWAN SPACE CENTRE SHAR
SRIHARIKOTA - 524124
INDIAN SPACE RESEARCH ORGANISATION

TENDER SPECIFICATION:

SDSC SHAR invites online quotations from bidders for the work described in this document as two part bid.

Part-1: Technical & Unpriced Bid
Part-2: Priced commercial bid

Complete Techno–commercial part of the bid shall be filled online in the "vendor Specified Terms' form of the e-tender. Any documents related (demand draft for tender fee & EMD) and any other relevant documents as per the tender shall be scanned in lower resolution format and uploaded to the e-tender under 'Documents solicited from Vendor' form only in ISRO e-procurement portal (https://eprocure.isro.gov.in). If space is not sufficient to attach/upload the entire documents, the same may be enclosed in a sealed cover super scribed with the name of the work & tender number and addressed & sent by registered post to the Head, Purchase & Stores, SDSC SHAR before due date.

TITLE OF THE WORK:

Fabrication, Supply, Erection and Commissioning of FCVRP replaceable parts.

1.0 GENERAL INSTRUCTIONS TO BIDDERS:

1.1 The bidder shall go through the document and understand the requirement before submitting the offer.

1.2 Transfer of this document to any other bidder is not permitted.

1.3 The document is the property of SDSC SHAR and shall not be used for any other purpose without the consent of SDSC SHAR.

1.4 The document shall be completely filled in all aspects and shall be submitted along with the offer. Any offer incomplete in any particulars of this document is liable for rejection.

1.5 This document shall be signed and stamped on each page as token of acceptance by a person legally authorized to enter into agreement on behalf of the bidder. It shall be scanned and attached along with online bid.

1.6 Bidder shall quote separately for fabrication and erection. If bidder prefers to fabricate replaceable parts at department site, the department will identify a

suitable place within 500m of erection site. Shelter, safety and other requirements to be made by the bidder.

1.7 Bid should not contain any terms & conditions which are not applicable to the bid. Corrections/alterations, if any, shall also be signed by the same person.

1.8 The online bids will be opened on the date and time specified in the letter inviting bid or as soon thereafter as convenient. Offers not received in time will not be considered.

1.9 Bidders shall set their quotations in firm figures and without variations/additions in the terms of this document.

1.10 If there is any ambiguity or doubt on any of the tender clause/condition, or if any other information is required, the matter shall be immediately brought to the notice of Head, Purchase & Stores, SDSC SHAR in writing.

1.11 As a similar system already exists at SDSC SHAR, bidder is advised to visit & examine the site and its surroundings to familiarize with existing facilities & environment and collect all information which may be required for preparing the bid and entering into the contract.

1.12 Claims & Objections due to the ignorance of existing conditions or inadequacy of information will not be considered after submission of the bid and also during implementation of the work.

1.13 It is the responsibility of the bidder to verify the mating interfaces (between replaceable part and fixed part of folding platform, i.e., M24 bolt interface) at site before bidding. Bidder shall consider the deviations if any, with reference to the tender drawings at bidding stage itself. Successful bidder shall prepare correct drawings, submit to department for approval and prepare as built drawings to meet erection requirement. No extra claim will be entertained during erection due to mismatch of interfaces with fixed portion of the folding platform with replaceable part.

1.14 Bid shall remain valid for a minimum period of 4 months from the due date of submission of the bid. The bidder will not be entitled during the said period to revoke or revise or vary the bid except and to the extent required by SDSC SHAR in writing. Bid shall be revalidated for extended period as required by SDSC SHAR in writing in such cases, unless otherwise specified, it is understood that validity is sought and provided without varying either the quoted price or any other terms & conditions of bid finalized till that time.

1.15 All direct and indirect costs associated with the preparation & submission of bid shall be bidders account and SDSC SHAR will in no case be responsible or liable for those costs, regardless of the conduct or outcome of the bid process.

1.16 The bid & all correspondence incidental to and concerning the bid shall be in English language.

1.17 The schedule of prices shall be read in conjunction with all the sections of this document. The price must be filled in the format for Schedule of prices **(Section-D).**

1.18 In case of any deviations from the technical specifications, the BIDDER shall indicate the same in Schedule of deviations **(Ref annexure-E**). If no deviations are listed in the schedule of deviations, it will be considered that the BIDDER complies in total with the technical specifications. Any deviations indicated elsewhere other than in the schedule of deviations in the offer will not be accepted. The tender will be rejected, if the deviations are not acceptable to the Department

1.19 Bidder must provide the point by point compliance to the technical specifications in the check list given in **Section-F** and shall submit along with the offer.

1.20 The BIDDER is advised to furnish all information called for in summary of data to be furnished along with the bid.

1.21 BIDDER is advised to quote for the complete scope. Partial response will not be entertained.

1.22 The supplier shall clearly indicate any assumptions made in respect of specifications, data or any other details that have not been mentioned in order but considered necessary to meet the specified application requirements. All such assumptions will not be binding on ISRO unless expressly agreed upon. The supplier, under these conditions, shall supply the platforms based on the data accepted to ISRO without any commercial implication.

1.23 The supplier shall be responsible for adherence of all the applicable rules, regulations & requirements of statutory bodies of the Andhra Pradesh State government and central government of INDIA, as desired.

Signature of the tenderer for accepting of specification mentioned above.

1.24 The erection work shall be carried out on SDSC SHAR working days only or permission to be obtained from the contract manger for late hours/holidays.

1.25 Supplier shall follow the safety regulations/codes and all the safety equipment required for carrying out the work such as safety belts, face shields, welding goggles, etc shall be supplied by the contractor at his own cost. Safety of the workers is in the scope of the contractor. Department is not responsible for safety risks if any to the contract workers during course of the contract period.

1.26 Accommodation will not be provided by SDSC SHAR to Contractors. Supplier shall make his own arrangement for accommodation, transportation & canteen facility for all his staff, technicians, labour & workers

1.27 No medical facilities will be provided by SDSC SHAR. Supplier shall make his own arrangement at his own expenses for medical facilities to site personnel.

1.28 Supplier shall prepare a detailed programme schedule for review/ approval by SDSC SHAR. Supplier as per exigencies of work shall revise and update programme periodically.

1.29 Supplier shall maintain records pertaining to the quality of erection work in a format approved by the Department. Whenever erection work is complete, supplier shall offer erected equipment for inspection to Department's engineer who along with Supplier's engineer will sign such records on acceptance.

1.30 Supplier shall carry out the works in accordance with the specific instructions given on the approved drawings, methods, statements or as directed by the department. Equipment shall be erected in neat manner so that they are perfectly levelled and properly aligned and oriented. Tolerances shall be established in manufacturer’s drawings or stipulated by department.

1.31 Upon completion of work, supplier shall remove all his equipment and material from the site within one week or a time mutually agreed. Supplier at all times shall keep site in clean condition and remove all unwanted material at regular intervals. In case supplier fails to remove all his equipment and material within the mutually agreed time, it is deemed that SDSC SHAR will arrange to remove the same at supplier’s cost.

1.32 Bids shall be arranged in two parts as follows.

PART – I: TECHNICAL AND UN-PRICED COMMERCIAL BID:

This bid shall comprise the following. The following documents shall be scanned and attached in the form 'Documents solicited from Vendor'

- Bid letter along with one set of this document duly signed and stamped on each page as token of acceptance.
- Power of attorney in favour of authorised signatory of the bid/document.
- Un priced copy of schedule of prices with all other commercial terms, taxes, duties, exemption certificates and conditions duly filled (Prices to be kept blank), signed and stamped.
- Checklist completely filled, signed & stamped, as confirmation of submitting all the required data.
- Deviation statement, filled, signed & stamped.
- Any other relevant document, bidder desires to submit.
- No document containing prices shall be attached.
- Demand draft of Earnest Money Deposit (EMD) and tender fee.
- Bid qualification criteria for supply of platforms and all supporting documents.
- Description of the procedures adapted for material procurement and fabrication with deviations from technical specification and proposed modifications.
- Write-up on the detailed procedure to be followed for erection and handling proposed to be followed for erection of platforms. Bar chart for supply & erection schedule indicating the duration for completion of various activities so as to complete the execution of the contract within the time frame stipulated in the tender specification.
- Fabrication shop layout where fabrication of platforms is planned
- Firm establishment certificate.
- Audited balance sheet including profit and loss account showing annual turnover / work orders of current and 3 successive previous years.
- Latest income tax return certificates for last three years.

If any documents cannot be attached due to space restriction, the documents can be sent by courier/post to the following address

PART-I TECHNO-COMMERCIAL BID	
Name of client	**Satish Dhawan Space Centre SHAR** Indian Space Research Organisation
Title of the proposal	***"Fabrication & Erection of FCVRP replaceable parts of SSAB"***
Due date and time of the opening	DD/MM/YYY
From (Name of the bidder with address):	
To:	**Head, Purchase & Stores** **Satish Dhawan Space Centre** **SHAR** **ISRO, Dept. of Space** **Govt. of India** **Sriharikota – 524124,** **SPSR Nellore Dist,** **Andhra Pradesh, India**

PART – II: PRICED COMMERCIAL BID:

1.33 The prices shall be filled in the respective forms available on-line. Any other terms and conditions given in this part shall not be considered and if insisted upon by the Bidder, bids are liable for rejection. No separate document shall be attached. Price bid shall not be scanned and attached in any form. If so, the offer will be rejected. No deviations in terms and conditions, assumptions, conditions, discounts etc. shall be stipulated in price bid. SDSC SHAR will not take cognizance of any such statement and may at their discretion reject such bids. **Quotation to be submitted with cost break up for fabrication and erection separately as given in schedule of quantity.**

1.34 SDSC SHAR may open Part – I of the bid on the due date of opening, subject to meeting the minimum evaluation criteria. Price Bids (Part-II) of technically and commercially acceptable offers will be opened at a later date.

1.35 Any bids/offers with price details in Techno-Commercial Offer (Part –I) will be rejected.

1.36 SDSC SHAR seeks response to the given questionnaire for assimilating data which would be used for evaluating the capability of the supplier for executing the referred work. Hence, the supplier is requested to provide only genuine data and any discrepancy found at a later point of time may result in rejection of the supplier from purchase process. Furnishing of data cannot be construed

as automatic qualification for participation in the tender. Questionnaire should be signed by a responsible and authorized person of the Company / Agency.

1.37 SDSC SHAR reserves the right to reject any or all the Bids without assigning any reasons thereof.

1.38 SDSC SHAR will scrutinize tenders to determine whether the tender is substantially responsive to the requirements of the tender documents. For the purpose of this clause, a substantially responsive tender is one which confirms to all the terms & conditions of the entire Tender document without any deviations and reservations. The decision of SDSC SHAR is final in this regard.

1.39 During the bid evaluation, SDSC SHAR may request bidder for any clarification on the bid OR additional documents.

1.40 Techno-commercial discussion will be arranged with bidder, if needed. Bidder shall depute his authorised representatives for attending the discussions. The representatives attending the discussions shall produce authorisation from their organisation to attend the discussion and sign minutes of meeting on behalf of their organisation if required. The authorised representative must be competent and empowered to settle/decide on all technical and commercial issues.

1.41 SDSC SHAR reserves the right to accept a bid other than the lowest and to accept or reject any bid in full or part without assigning any reasons. Such decisions by SDSC SHAR shall bear no liability whatsoever consequent upon such decision.

1.42 SDSC SHAR reserves the right to alter the quantities specified based on any change in requirement at a later date.

1.43 The Bidder, whose bid is accepted by SDSC SHAR, will be issued a Purchase Order (PO) to proceed with the work. Bidder shall confirm acceptance by returning a signed copy of the PO within 10 days from the date of receiving the PO.

2.0 COMMERCIAL TERMS AND CONDITIONS:

2.1 Excise Duty

SDSC-SHAR is eligible for Excise Duty Exemption under Notification No. 64/95 dated 16.03.1995 as amended by Notification No. 15/2007 dated 01.03.2007 and 10/97 with amendments. SDSC SHAR will provide necessary Exemption Certificate. No claim for payment of Excise Duty or Cenvat reversal will be allowed later. Supplier has to consider this into account while submitting offer.

Department will issue Excise exemption certificate to the final finished product only. No certificate will be issued to input raw materials or equipment / Bought out items. The supplier has to consider this into account while submitting quotations.

2.2 Sales Tax / VAT

With effect from 01.04.2007, the facility of Inter-State purchases by Government Departments against Form-D has been withdrawn. Now the rate of CST on the Inter-State sale to Government Departments shall be the rate of VAT/State Sales Tax applicable in the State of the selling dealer. Accordingly, the suppliers have to clearly indicate the %age of CST/ VAT applicable against each case in their tenders.

Service tax, if applicable shall not be included but indicated separately in schedule of prices (percentage of service tax applicable & amount on which it is applicable).

2.3 Income Tax

Income tax at the prevailing rate as applicable and if applicable from time to time will be deducted from the supplier's bills as per Income tax act and a certificate will be issued (TDS Certificate) to that extent.

3.0 EARNEST MONEY DEPOSIT (EMD)/BID SECURITY:

The tenderer has to submit an Earnest Money Deposit (EMD) in a single installment through Demand Draft (DD)/Banker's Cheque/ Fixed Deposit Receipts or Bank Guarantee from any of the Scheduled Banks executed on non-judicial stamp paper of appropriate value. In case of Bank Guarantee, it shall be valid for a period of 45 days beyond the final tender validity date. It shall be taken in favour of Sr. Accounts Officer, SDSC SHAR payable at State Bank of India, Sriharikota branch. Any tender not accompanied with EMD shall be treated as invalid tender and rejected.

Foreign vendors, registered vendors or vendors who have already applied for renewal of registration, Central PSUs/PSEs/Autonomous Bodies, Micro and Small Enterprises, KVIC, National Small Industries Corporation, etc., shall be exempt from the payment of EMD. Vendors seeking exemption from payment of EMD shall submit necessary documentary proof.

EMD of a vendor shall be forfeited if the tenderer/Contractor withdraws or amends his tender or deviates from the tender in any respect within the period of validity of the tender. Failure to furnish security deposit/performance bond by a successful vendor within the specified period shall also result in forfeiture of EMD.

EMD shall be refunded to all the unsuccessful vendors within thirty days after placement of the Purchase Order. EMD shall be refunded to the successful tenderer/Contractor after payment of the Security Deposit or may be adjusted against the Security Deposit. EMD shall be refunded to all the participants in cases where the tender is cancelled or withdrawn by the Centre/Unit, within thirty days from the date of such cancellation or withdrawal.

4.0 WARRANTY/GUARANTEE:

The supplier shall warranty/guarantee that the equipment furnished by him is in conformance with the requirement of the specifications. Goods covered by contract shall be free from defects in materials or workmanship for a period of Twelve (12) months from the date of successful commissioning & acceptance by Department. During the period, supplier has to provide and adhere to the following:

a) The successful bidder has to attend breakdown maintenance calls, if any. All the defective components have to be replaced or rectified on one to one basis. Break down maintenance should be responded within 48 Hours time and shall be completed within 48 Hours after respond.

b) In case vendor failed to attend and repair the system within 7 days from the date of reporting the problem, Department will reserve right to forfeiting the Bank guarantee (BG) apart from withheld of any payment payable to the vendor.

c) Where defects in items are remedied under warranty, the period for which the warranty operates shall be extended by such period, as the items were not available to SDSC SHAR. Where defect items are replaced by new ones, the full warranty period stipulated in the purchase order shall apply to such replacement items as from the date of their delivery.

5.0 SCHEDULE OF PRICE:

Supply price shall include all costs of "Material procurement, fabrication, inspection, painting, packing and transportation to SSAB, SLP-SDSC SHAR, Sriharikota.

Erection price shall include all costs of "Erection of 6 nos. of platforms, dismantling of 6 nos. of platforms (i.e., 4 nos. of existing platform replaceable parts and 2 nos. of new replaceable parts being supplied as part of this contract)

Contract price shall also include all travelling expenses, living expenses, salaries, overtime, benefit and any other compensation for engineers, supervisors, skilled / semi skilled workmen, cost of tools and tackles required for erection and other consumables material required and all taxes, duties and levies as applicable on the date of submission of bid.

Price shall be firm & fixed.

The rate quoted shall be on FOR SDSC SHAR, Sriharikota basis.

The taxes applicable for supply and erection shall be indicated separately in the price bid. If the offers submitted by the tenderer are silent on taxes, it will be presumed that quoted rates are inclusive of taxes & duties and no claim in this regard will be entertained later.

6.0 DISCOUNT:

Tenderer shall not indicate any discount separately and quoted price should be after deducting the discount.

7.0 MODE OF PAYMENT & TERMS OF PAYMENT:

All the payments due to the supplier will be made in Indian currency by crossed "Account Payee" cheque sent to the registered office of the supplier. Bidders can submit the banker details so that payments can also be made through ECS.

General terms of payments are as indicated below. Any deviation to these payment terms is to be brought out by the tenderer.

Schedule of prices is as follows:

7.1 For the supply of fabricated items:

- **20%** of fabrication cost as milestone payment against submission of proof of procurement of raw material at fabricator shop and inspection & clearance by department representative and on submission of bank guarantee of equivalent amount.
- **70%** of fabrication cost as milestone payment on pro rata basis after receipt of items at our site.
- **10%** of fabrication cost as milestone payment after successful erection and commissioning of the items and submission of PBG.

7.2 For erection, testing and commissioning of platforms at site:

- **100%** on successful completion of erection and handing over to the department.

Bank guarantee to be submitted for advance payments and milestone payments, i.e., payments made before despatch of the ordered items from the premises of the supplier.

8.0 SECURITY DEPOSIT AND BANK GUARANTEE:

8.1 Security Deposit:

The supplier, whose tender is accepted, will be required to furnish by way of security deposit for the due fulfillment of the contract such a sum as will amount to **10%** of the contract price of the work awarded.

The security deposit (bearing no interest) shall be held by the Department as security till satisfactory completion and handing of overall system and for the due performance of all suppliers' obligations under the contract as per delivery period or extension granted thereof by the Department.

The supplier within **15** days of Purchase Order, shall deposit with the Accounts officer, Satish Dhawan Space Centre SHAR, Sriharikota as detailed above by any one or more of the following modes namely By

1) a crossed demand draft in favour of Accounts officer, Satish Dhawan Space Centre SHAR drawn on SBI and payable at Sriharikota.

2)By a bank guarantee in the prescribed format (required format will be provided after award of contract). The bank guarantee shall be from a nationalized bank for & shall be valid for 30 days beyond completion period.

In case of breach of contract, the Security deposit shall stand forfeited in addition to other relief available to the Department under this contract.

8.2 Performance Bank Guarantee

The supplier shall guarantee for the performance of the equipment by providing bank guarantee in favour of the Department for an amount equivalent to ***10 % (ten percent) of the total value*** of this contract valid till the warranty period of the contract plus 3 months claim period.

The performance bank guarantee shall be submitted by the supplier with in ***fifteen days from the date of accepting the equipment*** as per the CONTRACT. Format for the performance bank guarantee shall be obtained from the Department.

9.0 DELIVERY SCHEDULE:

The realization of replaceable parts within the schedule is very essential. Hence, bidders are requested to adhere to the schedules given below. Fabrication must be completed within **4** months and shall be erected within **2** months.

Contractor shall follow the following schedule for executing the contract:

S no	Description	Responsibility	Target completion date
1	Purchase Order release	Department	T
2	Release of orders for raw material, bought out items and fabrication works, if any.	Vendor	T+15 days
3	Completion of fabrication.	Vendor	T+120 days
4	Receipt of all items at Department site.	Vendor	15 days from the date of dispatch clearance
5	Dismantling of 6nos of replaceable parts and Erection & functional checks of 6 nos. of replaceable parts being realised by through tender	Vendor	45 days from the date of site clearance for erection.

10.0 LIQUIDATED DAMAGES (LD):

In the event of the Supplier failing to complete the work within the delivery period specified in the contract agreement or in extension agreed thereto,

Department shall reserve the right to recover from the Supplier as liquidated damages, a sum of 0.5 percentage per week or part thereof of the undelivered portion of the total contract price of equipment or work. However, the total liquidated damages shall not exceed 10.0 percentage of the total Contract price.

The LD reckoning date shall be T+6 months from the date of clearance for supply portion and 3 months from the date of clearance for erection & commissioning portion of the contract price.

11.0 PRE-QUALIFICATION CRITERIA:

All the tenderers shall meet the following pre-qualification criteria. Offers of those parties not meeting the criteria will be duly rejected and will not be considered for evaluation.

1) Party shall have single purchase order for similar structural fabrication work of value not less than Rupees 50 lakhs during the any one of the last 3 years.
2) Party shall have experience/capability of executing the erection of similar structures at elevated heights up to 30m.
3) Party shall have facilities for executing the scope of the work, if the work is planned at their site.

12.0 DATA TO BE FURNISHED AFTER AWARD OF CONTRACT:

The BIDDER shall ensure the following documentation is prepared and submitted to PURCHASER for his review / record:

Schedule of fabrication, detailed drawings and documents to be submitted for review & approval with submission dates.

Quality Assurance Plan (QAP).

Bar chart for supply & erection schedule indicating the date of completion of various activities so as to complete execution of the contract within the time frame stipulated in the LOI / Purchase order.

Progress reports, Erection procedure, As-built drawings & Quality Assurance documentation.

The above list of documents is indicative and not exhaustive. The BIDDER / CONTRACTOR shall submit documents as specified in various sections of this specification and also as per the specific instructions of the PURCHASER.

Annexure to Indent No**: SHAR/VAST/2015003254**

MATERIAL PROCUREMENT, FABRICATION, SUPPLY, ERECTION & COMMISSIONING OF FCVRP REPLACEABLE PARTS OF SSAB

TECHNICAL SPECIFICATIONS

OWNER: INDIAN SPACE RESEARCH ORGANISATION

PROJECT: FCVRP REPLACEABLE PARTS

LOCATION: SDSC SHAR, SRIHARIKOTA

SOLID STAGE ASSEMBLY BUILDING
SECOND LAUNCH PAD
VEHICLE ASSEMBLY AND LAUNCH FACILITIES
SATISH DHAWAN SPACE CENTRE SHAR
SRIHARIKOTA-524124
INDIAN SPACE RESEARCH ORGANISATION

Signature of the tenderer for accepting of specification mentioned above.

1.0 INTENT OF SPECIFICATION:

This specification covers the description of work, technical parameters, materials, fabrication features, interfaces, erection.etc. The scope of the tenderer shall include understanding of Platforms & interfaces, functional requirement, procurement of raw material, fabrication, packing, transportation, delivery & erection at SSAB/SLP-SDSC SHAR, functional checks as per the enclosed specification under the supervision of ISRO at SSAB, SDSC SHAR, Sriharikota, SPSR Nellore District, AP, INDIA.

1.1 Quantity:

Fabrication, supply and erection of replaceable platforms (6 nos.) for FCVRPs as per the drawings listed in **Section C.**

i. Replaceable parts for FCVRP-1 with PSLV cutouts- 2 Nos.
ii. Replaceable parts for FCVRP-1 and FCVRP-2 with GSLV cutouts- 4 Nos.
iii. Cutout covers- 8 Nos. for PSLV and 12 Nos. for GSLV.

The scope also includes

Dismantling of existing 4 nos. of replaceable parts of FCVRPs (GSLV MKIII replaceable parts of FCVRPs-1&2). The overall size of which are same as the proposed ones, but with different cutout configuration.

Erection of 6 nos. of FCVRP replaceable parts being realised through this contract.

Dismantling of PSLV/GSLV- 2 Nos. (FCVRP-1) replaceable parts as preferred by purchaser at the time of erection (i.e., 6 nos. of replaceable parts erection and dismantling).

Fabrication and supply of aluminum cutout covers (745 kg approx) with suitable interface on the platforms and fixing the same as shown in drawing.

The estimated finished weight of all the platforms (58.05t) and aluminum covers (1018 kg) is approximately **59.069 tons**. The contractor shall agree for addition / deletion of the works and such variation is limited to ± 10% of the order value. Offer shall be valid for ± 10% of the order value. However payment will be made based on the final finished drawing weight only.

Procurement, fabrication, transportation, handling at site, erection & commissioning of structural steel / Mild steel components conforming to IS:2062 & IS:808 is **58.05t** (approximate) and cutout covers made of aluminum is **1018 kg** (approx). Items coming under above category is, replaceable folding platform, toe guards, cutout covers, hand rails, etc.

1.2 Back ground information:

Solid Stage Assembly Building (SSAB) of Second Launch Pad at SDSC SHAR is equipped with 3 sets of Folding-cum-Vertically Repositionable Platforms (FCVRPs) to provide approach to different elevations of launch vehicle during integration. Each set consists of 2 Nos. of FCVRP on either side of SSAB. Each FCVRP is made in two parts, viz., fixed portion and foldable portion.

During the launch of different vehicle variant viz., PSLV, GSLV and GSLV MKIII, the foldable part has to be changed correspondingly. To ease the integration, the foldable part (which matches to each of launch vehicle) has been constructed in two parts (Modular construction) viz., permanent part and replaceable part.

a) Permanent part: contains the critical mechanisms like hinges, pulleys & chain links. This part is attached to the fixed platform through 3 Nos. of hinges

b) Replaceable part: this part has cutouts suiting the vehicle configuration. This part is connected to the permanent part through M24 bolts at 28 locations along its three sides. The fourth side of replaceable part is towards the launch vehicle and will have cutouts suiting the external configuration of corresponding launch vehicle.

Thus, the replaceable part of FCVRPs foldable portion has to be changed for different variants of the launch vehicle.

1.3 Functional requirements:

Presently GSLV MKIII launch vehicle is being assembled at SSAB, in order to meet the requirement of frequent launches of PSLV and GSLV, it is proposed to integrate these vehicles also at SSAB.

In order to cater this requirement, in addition to the existing GSLV MKIII replaceable part, it is planned to realise replaceable parts with GSLV & PSLV configurations also for attachment to the permanent parts of foldable platforms. Hence 3 sets (6 nos.) of replaceable parts i.e., for FCVRP-1 for PSLV and for FCVRP-1&2 for GSLV have to be realized to meet the requirement. Configuration of the replaceable platforms is given in the following drawings for reference in **SECTION-C**:

1. Drg No. 10-04-200-06-02-61/A1/R1- 3 sheets
2. Drg no. 10-04-200-06-02-62/A1/R1- 7 sheets
3. Drg no. 10-04-200-06-02-63/A1/R1- 7 sheets

1.4 Constructional Features:

The replaceable part is designed to provide approach to the launch vehicle. It has been designed to withstand a tip load of 15 kN towards the vehicle side. This structure is constructed of rolled steel sections with a chequered plate covering the top surface act as a working platform. The truss of the replaceable part is constructed by hot rolled sections as shown in the drawing with interconnecting beams and few stiffening members. The free end of platform extends up to the vehicle centre line and will have cut-outs suiting the vehicle external configuration of PSLV & GSLV (as shown in drawings).

2.0 DETAILED SCOPE OF WORK:

- Understanding the configuration of the FCVRP replaceable parts for different vehicle variants.
- Understanding the supplied drawings and preparation of part and process drawings, if required.
- The fabrication which work involves procurement of raw material & bought out items, marking, cutting, grinding, edge preparation, alignment/fit up, welding, drilling, tapping etc including the stage inspection, sand blasting and painting.
- Supply of fabricated FCVRP replaceable parts to SSAB, SDSC SHAR.
- The erection which involves positioning, alignment/leveling, match drilling of interfaces, assembly & final tightening.
- Carrying out the functional test of replaceable parts after their assembly (i.e., folding/ unfolding of 2 halves to ensure interference free movement, verification of cutout profile wrt centerline of the vehicle..etc).
- Submission of Execution plan of all major activities like raw material procurement, fabrication, packing, delivery, assembly, erection and testing with the offer.
- Submission of welding qualification plan, machining details-if any, inspection scheme, painting scheme.
- Submission of reliability and quality assurance plan for review and approval by Department
- Platform handling system is not in the scope of the tenderer, interfaces to be generated on platform as shown in the drawing. Suitable handling system will be provided by the department. Erection using the handling system (supplied by department) is in the scope of the tenderer.

3.0 MANUFACTURING, ERECTION AND ASSEMBLY:

3.1 Material specification:

- The material required for fabrication is in the scope of the contractor.
- Structural steel confirming to IS: 2062:2011, Grade E250 (IS 2062:2006 Grade B) to be used.
- The Mild steel chequered plate confirming to IS-3502 standards to be used.
- The rolled sections should confirm to IS 808
- All rolled material before being laid off shall be clean, free from bends, twist etc. and straight within tolerance allowed by IS: 1852 – 1885. If straightening or flattening is necessary, it shall be done by methods that will not damage the material.
- Long Plates shall be straightened by passing through a mandrel or leveling rolls and structural shapes by the use of mechanical or hydraulic bar section straightening machines
- Material shall be procured from standard suppliers (preferably TATA steel or SAIL or Jindal steel) and it should be from fresh stock. The material test identification shall be engraved on plates which are to be taken up for manufacturing.
- Aluminum material shall confirm to IS: 736 and jindal aluminum sections of relevant numbers mentioned in the drawing only to be used for fabrication of cutout covers.
- All material test certificates shall be provided for verification by department.

3.2 Fabrication methodology:

- The fabrication and machining (wherever applicable) of the segments shall be carried out at tenderer shop.
- The supplier can generate the necessary part/ process drawings, and assembly drawings.

- The supplier shall make out special fixture or layout over the fabrication bed for fit-up assembly and welding.

- Edge preparation shall be carried out for all sheets/sections before fit-up and welding.

- The structure after fit up and tack welding shall be offered for stage inspection. Full welding can be proceeded after ensuring the dimensional accuracy.

- All welding shall be carried out by qualified and approved welders. The welding shall be performed in accordance to ASME Section-IX.

- The supplier shall decide the applicable welding process and should use standard welding equipment and welding consumables.

- The supplier shall furnish the procedure for welding, welder/welding operator's performance qualification and final inspection. Department will carry out the final review of these documents.

- Welding sequence shall be such that the distortion and residual stresses are minimised. All welds shall be carried out in a proper sequence so as to balance the applied heat as far as possible. (A wandering sequence shall be used whenever necessary).

- The weld joints shall be certified by PT inspection at different stages as applicable. Records to be submitted whenever required by department.

- The supplier shall make the cutouts of platforms with proper care and the dimensions must be maintained within specified tolerances. Any deviation in these dimensions is not acceptable.

- The level difference between any two points of the platform surface shall not exceed 5 mm in the unfolded condition without any additional live load on the platform (i.e., except inspecting personnel).

- Drilling of pilot holes and interface holes along the edges of the replaceable part, shall be carried out after matching the fabricated part with the permanent part during erection at site (SDSC SHAR).

- All fabrication work undertaken in parts shall bear distinct match marking to facilitate identification during erection.

- Handrails are to be provided for the platforms as shown in drawing. All Platforms shall be provided with toe guards.

- The Platform projections between Strapons are to be made sliding type as indicated in the drawing. The dimensions are to be critically controlled so as to ensure interference free movement.

- All cut-outs are to be closed with aluminum cutout covers having handling points. These covers may be kept closed based on the vehicle integration requirements. Supply of fasteners required for assembly of covers is in the scope of suppliers and cutout covers to be fixed at the time of erection.

- Supply of paint and the painting of structures (Inclusive of Primer Coating) shall be as per enclosed specification.

- Bidder shall follow the guidelines & process requirements given in **Annexure-1** for producing the quality product.

- The drawings attached with the bid are for tender process only. Fabrication drawings will be provided along with the purchase order.

- Unless otherwise specified in drawings, tolerances for fabrication shall be as per ISO: 13920.

- All sharp corners of machined/ fabricated items shall be smoothened by deburring, hand grinding, chipping and filing.

- The procedure to be followed by supplier for all weld repairs shall be subject to approval by department.

Signature of the tenderer for accepting of specification mentioned above.

- Fabricator employed at site shall have adequate welding, metrology and portable NDT facilities.

3.3 Erection/Assembly methodology:

- Dimensions of interfaces of permanent part of folding platform to replaceable part have to be obtained by carrying out measurement at SSAB/SLP, SDSC SHAR

- Interface drawing to be generated for replaceable part to suit the interface available on the permanent part of the foldable platform at SSAB, SLP.

- Axis marking and match markings are to be done on corresponding replaceable part before transportation.

- Procedure to be finalized for the erection of the replaceable part and clearance from the vendor to be obtained.

- During erection at the SLP site, the corresponding platform replaceable part can be positioned near the permanent part using SSAB facility crane.

- The alignment has to be carried out precisely by ensuring surface level and specified clearances.

- Match drilling of interface holes has to be done along the edges of the replaceable part, with reference of holes on the permanent part.

- M24 taper washers have to be provided at the interfaces, wherever required.

- M24 bolts to be assembled at the interfaces as shown in the drawing with heads on top surface of platform and the recommended torque to be applied.

- Trial assembly of the replaceable parts of FCVRP-1 (PSLV) & (GSLV) and dismantling of one set & assembly of FCVRP-2 (GSLV) with the permanent part of the foldable platform at 13m & 21.5m have to be carried out.

- SSAB building clearance shall be obtained for erection & dismantling of 3 sets (6 nos.) of platform replaceable parts.

3.3.1 General instruction for Erection/Assembly:

- The supplier shall dispatch the fabricated items to SSAB-SLP, SDSC SHAR, Sriharikota. At site the replaceable parts have to be assembled with the fixed part of the FCVRP. Erection of 6 nos. of platforms & dismantling of 6 nos. of platforms shall be done by the supplier on his own or by a sub contractor approved by the department.

- The erection/ dismantling of the FCVRP replaceable parts at SSAB, SDSC SHAR, Sriharikota shall be done by the supplier in a single phase/two phases as approved by department. Supplier shall communicate readiness of FCVRP replaceable part fabrication and ISRO will inform when the site is ready to receive the replaceable parts. The supplier's representatives shall erect the replaceable parts after getting clearance from department.

- Party shall inform the department around 7 days in advance about replaceable parts unloading requirement at SSAB, SLP, SDSC SHAR. For erection purpose, material handling support for unloading at SLP, transportation from temporary storage at SDSC SHAR to SSAB will be extended by the department at free of cost. Material handling support for fabrication purpose (if fabricated at site) will be extended on payment basis subjected to availability of the equipment.

- EOT crane support will be extended at SSAB at free of cost for replaceable part erection / dismantling.

- Fabrication drawings have to be verified by bidder with FCVRP permanent part interface before execution of the contract. Deviations if any, to be reported and drawings to be updated before executing the contract with the permission of the department. No extra claim for rework due to mismatch of interfaces will be entertained during erection

- Supplier shall carry out the works in accordance with the specific instructions given on the approved drawings, method statements, documents or as directed by Department.

- Erection works are required to be done at elevated heights (13m & 21.5m) and it is the contractor's responsibility to see the safety of his workmen and protection of surrounding equipment at work zone.

- All tools, tackles (except crane), etc for erection are in the scope of supplier.

- Equipment shall be erected in a neat manner so that they are in level/ plumb/ square and are properly aligned & oriented.

- Tolerances shall be as established in drawings or as stipulated by Department. The platform shall be welded or bolted only after its alignment is checked and found acceptable by Department.

- Supply of fasteners as given in the drawings is in scope of supplier. Necessary test certificates shall be furnished for the fasteners.

- During erection and commissioning, bolt tightening shall be carried out using torque wrench/ impact wrench to ensure required tightening/ tension in the bolts.

- Any work, other than specified above, for satisfactory completion of the work is in the scope of the contractor. Such works to be brought out in the offer.

- The platform top surface should free from the projection of fasteners and washers.

- If any projection is observed, then the top flange of ISMB250 is to be modified to avoid projection of the bolt head, by cutting the flange portions at required locations & welding suitable plate washers.

- Supplier shall provide all supervision, labour, tools, machines, equipment, rigging material and incidental material such as wedges, etc. required to complete the works. Supplier shall also provide at his own cost all such consumables like oxygen – acetylene gas, welding rods, grinding/cutting wheels, temporary supports, shims etc. required to complete the work.

- Supplier's staff shall include adequate number of competent erection engineers with proven experience on similar works to supervise the erection works and sufficient skilled, unskilled and semiskilled labour to ensure completion of work in time.

- Supplier's erection staff shall arrive at site on date agreed by SDSC SHAR. Prior to proceeding to work, supplier shall however, first ensure that required/sufficient part of his supply has arrived at site.
- Supplier shall carry out work in a true professional manner and strictly adhere to the approved drawings. Any damage caused by Supplier during erection to new or existing building / environment shall be made good at no extra cost to Department.
- Electrical (Single phase and 3-phase 415V, 50 Hz) power will be provided by the Department at a suitable location near the work spot on chargeable basis for fabrication and at free of cost for erection purpose. However onward distribution shall be made by the supplier. Installation of necessary distribution system for Construction power in a safe manner in strict conformity with local rules & regulations will be the responsibility of the supplier. Necessary panels, earthing and cables to be provided by the contractor. Statutory safety norms are to be met by the contractor. Details of the proposed electrical equipment have to be submitted for department approval for ensuring safety norms.
- The replaceable part shall be erected ensuring that there is no mismatch between existing platforms and replaceable part.

4.0 INSPECTION AND TESTING PROCEDURES AND SCOPE OF INSPECTION:

4.1 The essential stage inspections are:

- Raw material inspection & Material traceability
- Edge preparation & Tack welded stage (weld set up)
- Root run inspection
- Final welding
- Pre and post weld heat treatment (records), wherever applicable.
- Dimensional inspection (records)
- NDT of weldment as per requirement.

- Review of WPS, PQR and welders qualification as required.
- Final dimensional inspection (records)
- Geometrical tolerances checking at shop.
- Control assembly and alignment at site.
- Sand blasting and primer painting.
- Final assembly and dismantling, if required.

- Raw Material Inspection shall be carried out at the Supplier's shop for compliance of the raw materials to the specified standards by department official.
- Under the essential stage inspection, department will inspect pre and post weld heat treatment (if applicable) and dimensions. At all stages of inspection and at other important mile stones, ISRO may participate.
- Fabricated components shall be inspected at the Supplier's shop for compliance with the drawings.
- Bought out components shall be inspected at Supplier's shop for compliance with the specifications.
- Full Assembly of the platforms shall be inspected at Purchaser's premises and at site after assembly for compliance with the Assembly Drawings and performance requirements.
- After the award of contract, supplier shall prepare detailed Quality Assurance Plan (QAP) for inspection of the platforms. The QAP shall be reviewed and approved by the purchaser.
- If any item needs to be rectified, the supplier shall inform to department in writing and provide rectification procedure. After review and approval of the rectification procedure by department only, tenderer shall undertake rectification of said item.

Signature of the tenderer for accepting of specification mentioned above.

- After rectification, the same shall be re-inspected by department and after approval; the item may be used in the system. In case the said item fails during functional test or operation, tenderer shall replace the item at free of cost within the warranty period.

- Supplier shall ensure that the material once rejected are not reused and shall be promptly removed from shop and replaced with new material for purchaser's inspection.

- Supplier shall maintain records of all inspection and testing, which shall be made available to department. Department has right to specify additional inspection or testing as deemed necessary.

4.2 Method of giving inspection call:

- Supplier shall furnish tentative inspection schedule in the prescribed format within 15 days of placement of order.

- Supplier shall give minimum 7 days' notice to purchaser in prescribed format for material or work to be offered for inspection.

- Supplier shall inform the department the dates of stage inspection from time to time.

4.3 General instruction for Inspection:

- Bidder shall offer for periodical inspection at critical stages and final inspection to the department. Clearance to be obtained from department before despatch.

- Stage & final inspection including review of documents by Department, and shop inspection (at Vendor's works) & at site after erection with all required measuring instruments to be arranged by the supplier.

- Offering the department to carry out the inspection works at various stages as per the approved QAP for manufacturing procedures in the document are only for the general guideline of the supplier. The supplier shall furnish these details in their offer as required in the relevant articles of this specification.

- Supplier shall ensure that material and equipment are offered in same priority of assembly as per agreed schedule.

- For fabrication work carried out at site, the same standard of supervision and quality control shall be maintained as in shop fabricated work.

- No material shall be painted except one coat of primer painting (except weld joints) or dispatched to site without inspection and issuance of acceptance certificate by department representative, unless such inspection is waived in writing by department.

- The fact that certain material has been accepted at supplier's shop shall not invalidate final rejection at site by department, if it fails to be in proper condition or has fabrication inaccuracies, which prevent proper assembly or dimensional inaccuracies.

The above shall also not invalidate any claim which department may make because of defective or unsatisfactory material and/or workmanship.

5.0 ACCEPTANCE TEST:

- After shop fabrication, testing and inspection of the platforms shall be done in the following manner at SSAB/SLP, SDSC SHAR.

- Dimensions, various clearances, surface finish etc as specified in drawings.

- Leveling & alignment of platforms.

- Folding/ unfolding movement of the Platform without interfering with other half.

- Cutout covers to be fixed in position, rework if any to be carried out at free of cost.

- The platform has to be loaded with prescribed load as per load document provided by SDSC SHAR (load will be arranged by department).

- The Deflection at the tip of the Platform in unfolded condition after loading for 10 minutes to be recorded.

- The deflection at the tip of the platform in the fully unfolded condition under full load (1t live load and 1.5t tip load) shall not exceed 10mm. To meet this, necessary repair to be executed at free of cost if called for (Design is not in the scope of bidder).

- After the erection work is completed, the supplier shall make all required adjustments until all guaranteed performance requirements are met.

- If the stipulated performance requirements are not fulfilled, the supplier shall rectify the deficiency by providing it in every case, by replacing / repairing the parts of system at free of charge to the purchaser immediately. All rejected equipment shall be removed from the site at supplier's expense.

6.0 STANDARDS AND CODES:

All the items supplied or used shall be new and of first quality and shall be manufactured / fabricated and tested in accordance with the latest editions of the relevant Indian / international standards. Any components or systems where no specific standards are applicable shall be fabricated as per the instructions and directions of the purchaser or its authorized nominee.

All electrical equipment used shall confirm to the latest Indian electricity rules as regards to safety, earthing and other essential provisions specified therein for installation and operation of electric parts.

The following are some of the **standards & codes** relevant to this specification.

IS 549	Split fins specification
IS: 736	Specification for wrought aluminium & aluminium alloy plate for general engineering purposes
IS: 800	General Construction in Steel – Code of practice
IS: 808	Dimensions for Hot Rolled Steel Beam, Column, Channel and Angle sections
IS: 816	Code of practice for Use of Metal Arc Welding for General Construction in Mild Steel

Signature of the tenderer for accepting of specification mentioned above.

IS: 823	Code of procedure for Manual Metal Arc Welding of Mild steel
IS: 1161	Steel tubes for structural purposes-Specifications
IS: 1181	Qualifying Tests for Metal Arc Welders (engaged in Welding Structures other than Pipes)
IS: 1323	Code of practice for Oxy-Acetylene Welding for Structural work in Mild Steels
IS: 1341	Steel butt hinges-Specification
IS: 1364	Hexagon Head Bolts, Screws and Nuts of Product Grades A and B
IS: 1367	Technical supply conditions for threaded steel fasteners
IS: 1570	Schedules for Wrought Steels specified by tensile or yield properties
IS: 2062	Hot Rolled Medium and High Tensile Structural Steel – Specification
IS: 2315	Open type thimbles
IS: 2485	Drop forged sockets for wire ropes for general engineering purposes
IS: 3502	Steel Chequered plate-specification
IS 4190	Eye bolts with collars
IS: 4923	Hollow steel sections for structural steel use
IS: 5372	Taper washers for channels
ISO 13960	Tolerances for fabrication
ASTM E165	Standard Test Method for Liquid Penetrant Examination
ASTM E709	Standard Guide for Magnetic Particle Examination

Signature of the tenderer for accepting of specification mentioned above.

- The welding equipment, welding consumables, preheating, other auxiliary functions and welding personnel shall comply with all currently applicable statutes, regulations and safety codes in the locality where the equipment are to be fabricated and installed. Nothing in this specification shall be construed to relive the SUPPLIER of his responsibility. Specifically, the latest editions of the codes and standards listed below shall apply:

a) ASME Boiler and Pressure Vessel Code (BPV Code), Section II Part C- Material Specification for Welding Rods. Electrodes and Filler Metals

b) Ultrasonic testing shall meet the requirement of ASTM A435.

c) ASME BPV Code, Section V-Non-destructive Examination (NDE)

d) ASME BPV Code, Section VIII Division I-Rules for construction of Pressure Vessels

e) ASME BPV Code, Section IX – Welding and Brazing Qualifications

f) American Society of Non-destructive Testing (ASNT) SNT-TC-IA, Recommended Practice

g) Indian Boiler Regulations (IBR)

h) Any other codes and standards relevant to the application with the approval of department.

i) Levels of acceptance of defects in welds shall be in accordance with ASME BPV Code Section VIII Division 1.

j) For equipment under the purview of IBR, the levels of acceptable defects shall be as per IBR.

- The codes and standards listed above form an integral part of this specification. In the event of conflict between this specification and the standards & codes, the more stringent shall govern.

- If no specific requirements are given in this specification, the requirements of the applicable code shall govern.

Signature of the tenderer for accepting of specification mentioned above.

7.0 QUALITY ASSUARANCE PLAN (QAP):

Material used for this work shall be from fresh stock, free from defects and of the most suitable grade for the purpose intended. All work under this contract shall be performed in a skillful manner and shall be consistent with the best practices of the industry.

If at any time SDSC SHAR (ISRO) notifies that any equipment, material or workmanship fails to meet the specified standards, the contractor shall promptly take all the remedial steps required to meet those standards.

The minimum requirements for ensuring quality at various stages are spelt out below. However, the Quality Assurance Plan (QAP) similar to that is given in Table-1 shall be prepared by the vendor and to be submitted to the department for review and approval considering the following:

- Stage wise inspection is in the scope of the contractor.
- Review and witness at identified critical stages by the department.
- All the components material / fabrication inspection as referred in the drawings

The following are the final inspection / tests that shall be carried out during various stages of manufacture, as applicable:

- Visual and dimensional inspection of components / subassemblies
- Complete assembly of platforms at VENDOR’s shop
- Complete assembly of platforms at site and testing for performance requirements

TABLE-1: QUALITY ASSURANCE PLAN

SL. NO	COMPONENT /OPERATION	CHARACTERISTICS TO BE CHECKED	METHOD OF CHECKING	CATEG-ORY	EXTENT OF CHECK	REFERENCE DOCUMENTS	ACCEPTANCE NORMS	FORMAT OF RECORDS	INSPECTION AGENCY		REMA-RKS
									VR	IS	
A. MATERIAL (RAW MATERIALS & BOUGHTOUTS)											
1	Rolled plates& sections, forgings &castings	a. Appearance	Visual	Major	100%	IS:2062	Freedom from defects like pitting, cracks etc.	--	H	R	
		b. Properties	Chemical analysis &physical test	Major	100%	IS:2062	Drawing specification	Mill test certificates /Lab reports	H	R	
		c. Internal flaws	UT	Critical	100% for plates≥20 mm thick, 100% for castings & forgings	ASTM A435	specification	NDT Reports	H	R	
2	Fasteners (high tensile bolts & nuts etc.)	a. Quality	visual	Major	Sample check as per relevant specification	IS:1367	a. No cracks b. Proper matching with nuts	IR	H	R	
		b. Chemical composition & physical properties	Chemical analysis, mechanical test	Major	Sample check as per relevant specification	IS:1367	IS:1367 Part III	Manufacturer's test certificates	H	R	
		c. Dimensional	Measurement	Major	Sample check as per relevant specification	IS:1367	IS:1367 Part III&XIII	–	H	R	
B. WELDING PROCEDURE,WELDER'S QUALIFICATION, ETC.											
1	Welding	WPS, welder's & welding operator's qualification	Test piece visual, physical& NDT	critical	100%	ASME sec IX	ASME sec IX	WPS,PQR& WPQ	H	R	
C. ERECTION AT SITE											
1	Fabricated Material Inspection	Visual, dimensional, review of TC&IR	Visual& measurement	Major	100%	TS & approved drawings	TS & approved drawings	IR	H	R	
2	Welding & welder qualification	WPS, welder's & welding operator's qualification	Test piece visual, physical& NDT	critical	100%	ASME sec IX	ASME sec IX	WPS,PQR& WPQ	H	R	

Legend:
VR: Vendor
IS: ISRO
H : Carrying out responsibility
R: Review of records & results
W:Test/inspection to be witnessed
IR: Internal report

Signature For vendor | Signature For ISRO | Date: Place:

Signature of the tenderer for accepting of specification mentioned above.

8.0 SURFACE PREPARATION AND PAINTING:

8.1 Preparation of surfaces:

All surfaces to be painted shall be clean, dry and free from oil, grease, dirt, dust, corrosion and weld spatters. Any other surface contaminant except tightly bonded residues of mill scale rust is permissible to a limit of not more than 5% of whole surface and a maximum of 10% on any particular square inch area. Surfaces that may become inaccessible after erection shall be prepared and painted while still accessible as per the same procedure mentioned.

8.2 Grid Blasting:

The entire surface of all the fabricated materials is to be grid blasted as per near white quality of steel structures painting council (SSPC) standard of SA 2.5 of SIS 055900. The surface profile after blasting shall be between 37-65 microns and should be of jagged in nature. Hand cleaning by chipping and scraping followed by wire brushing / abrasive wheels is allowed for items where surface preparation is difficult by sand blasting after taking necessary approvals from purchaser. All surfaces shall be degreased using a suitable solvent to remove oil & grease and shall be dried off before painting.

8.3 Painting Scheme:

Complete Platforms shall be painted as per the instructions given below:

The following painting scheme shall be followed:

1. Inorganic zinc silicate, DFT - 65 microns (min) at shop floor
2. Inhibitive polyamide epoxy, DFT - 100 microns (min) at site
3. Aliphatic acrylic polyurethane, DFT - 40 microns (min) at site
   (Non fading colour due to UV radiation)

All the suppliers shop fabricated items shall be grid blasted, primer painted to 65 micron DFT before transported to SDSC SHAR. After completion of the erection, all the damaged primer painted area shall be rectified as per following specifications:

1. Inorganic Zinc Silicate Primer:

- Two part, self cured
- Dry temperature resistance to 400^0 C
- Minimum shelf life of 12 months
- Excellent abrasion resistance
- Minimum coverage of 8 m^2/litre at 65 microns (minimum)
- Volume of solids 60% (minimum) by weight and 80% of zinc in dry film by weight
- No mud cracking at an applied thickness of 75 microns.

After primer painting, all items shall be intermediate painted with inhibitive polyamide epoxy having a DFT of 100 microns (min) as specified below:

2. Inhibitive Polyamide Epoxy:

- Two pack, polyamide cured
- Rust inhibitive pigmentation
- Lead & Zinc chromate free
- Suitable as an intermediate coat between an inorganic zinc primer & an aliphatic acrylic polyurethane finish coat.
- Volume solids by volume: 60%
- Minimum coverage of 4.5 m^2 / litre at 125 microns (DFT)

The total surface shall be final painted with sufficient number of coats using Air drying acrylic aliphatic polyurethane finish paint, having a DFT of 40 microns.

3. Aliphatic Acrylic Polyurethane Coating:

- Two packs, catalyst Iso-cyanate cured
- High glass finish
- Glass & colour retention upon prolonged exterior exposure/UV radiation.
- Suitable as an exterior finish coat over an inhibitive polyamide epoxy coating.
- Hard, tough, flexible & abrasion resistance.
- Minimum coverage of 17 m^2 / litre at 25 microns.
- Volume solids by volume: 48% (minimum)

All box sections before closing shall be painted with primer and finish paint inside the Box and a record to be made by successful bidder.

All paint and primer shall be of standard quality and procured from approved manufacturers namely Grand Polycoats (GP), BOMBAY Paints and Asian Paints. If any other make is preferred by supplier, approval shall be obtained from department. The supplier shall provide "Elcometer" / Paint thickness measuring gauges at free of charge and shall measure the thickness of paint in the presence of the representative of the purchaser at random locations selected by him.

After painting the assembly, if any minor fabrication such as welding, grinding has been carried out, then primer and paint has to be reapplied subsequent to the completion of fabrication work.

Field painting shall only be done after the structure is erected, levelled, aligned and connected in its final position, tested and commissioned. However, touch-up painting for making good to any damaged shop painting and completing any unfinished portion of the shop coat shall be carried out by the supplier at free of cost. The materials and specification for such painting in the field shall be in accordance with the requirements of the specification.

Painting shall not be done in frosty or foggy weather or when humidity is such as to cause condensation on the surfaces to be painted. Before painting of steel, which is delivered unpainted, is commenced, all surfaces to be painted shall be dried and thoroughly cleaned from all loose scale and rust.

All field bolts, welds and abrasions to the shop coat shall be spot painted with the same paint used for the shop coat. Where specified, surfaces which will be in contact after site assembling shall receive a coat of paint (in addition to the shop coat, if any) and shall be brought together while the paint is still wet.

Fasteners which are galvanized or otherwise treated, shall not be painted.

Unless otherwise provided for, surfaces within 50mm of any field weld location shall be free of materials that would prevent proper welding or produce objectionable fumes while welding is being done.

Coating materials like coatings, thinners and cleaners shall be stored in tightly closed containers bearing manufacturers name, product identification, batch number and manufacturing date in a covered, well ventilated area where they will not be exposed to sparks, flame, direct sun light and rainfall. Paints supplied in sealed containers shall be used as soon as possible once the container is opened. The manufacturers instructions for temperature limitations shall be followed.

Coating material shall be thoroughly mixed prior to application in order to avoid settling of pigments. Thinning shall be done for workability and improved spray characteristics only. The manufacturers recommendations for thinning, mixing, handling and applying shall be strictly followed.

While painting the new structures, the already finished floors and structures shall not be spoilt. If there is any spillage of paint on the floors or members on the finished structures, the supplier has to clear and provide the painting to the spoiled areas.

Paints shall have proper shelf life to meet the requirements before application. Proper action shall be taken well in advance prior to actual usage.

The supplier should use the following colour code:

- Apple green to be applied on surface above the platform.
- White colour to be applied below the platform.
- Handrails, toe guards and chain guards to be applied with international orange colour.

9.0 TRANSPORTATION & TEMPORARY PLACEMENT:

- After the completion of department Inspection at shop, the replaceable parts shall be properly match marked into transportable modules.
- The material shall be loaded on truck/ trailer at fabrication yard, transported to site and unloaded at site using mobile crane (crane will be provided by department).
- Temporary storage place is approximately within 500 m from SSAB building. It is an open yard without roof and of sandy soil.
- The equipment delivered at site shall be inspected and checked for totality of requirement.
- The Contractor shall submit documents depicting fabrication and erection procedure at site.
- The centerlines & benchmarks shall be checked and established in suitable place for easy reference.
- Failure to comply with the instructions may result in delay in payment apart from imposing any other charges as may be deemed to fit.
- The supplier shall be responsible for transporting all the FCVRP replaceable parts to SSAB, SDSC SHAR, unloading and storage.
- No part/equipment shall be delivered without obtaining dispatch clearance from SDSC SHAR.
- All the equipment shall be properly packed to avoid any damage during transportation / handling / storage. Unless otherwise provided for in the contract, all containers used by the Supplier shall be non-returnable.

- The equipment received at site shall be stored at a place assigned for this purpose. Supplier shall take proper care while storing the equipment.

- All packing and transport charges, transit handling costs, transit risk coverage and transport fees of agents employed at the place of delivery or elsewhere, shall be included in the price offered by the supplier.

10.0 PERFORMANCE REQUIREMENT:

The platforms shall perform satisfactorily to meet the guarantee requirements stated in this specification to the entire satisfaction of the PURCHASER against poor workmanship, material defects.

11.0 FINAL DOCUMENTS:

Supplier shall submit all the raw material test certificates, Ultrasonic testing reports of the raw material, Ultrasonic test certificates of all necessary welds and Dimensional inspection reports of individual components.

The following test certificates and documents in 3 copies including original endorsed by manufacturer shall be submitted along with delivery of the item:

- Raw material identification & physical and chemical test certificates for all materials used in fabrication.
- WPS, PQR &WPQ documents as per applicable code.
- Details of stage wise inspection and rectification records for fabricated items.
- Control dimension charts with records of alignment and squareness.
- Details of heat treatment charts (if applicable) as per specification.
- NDT reports as per respective code.
- Surface preparation and painting certificates.
- Control assembly, alignment & geometrical accuracy certificates.
- Assembly and erection procedure
- As built drawings in case of accepted deviation.

Where physical and chemical test certificates of material are not available, the supplier shall arrange readying the specimens and test samples of the materials, testing them at government approved laboratory at his cost and submit the copies of the test results for scrutiny and approval.

Annexure-1

1.0 GUIDELINES:

These following guidelines shall apply to shop and site fabrication of all welded joints in carbon steel. The specification shall apply to all the joints indicated below:

a) Butt joints produced by double sided welding which produce the same quality of deposited weld metal on both inside and outside weld surfaces.
b) Butt joints produced by single sided welding having backing strip which remains in place and full penetration butt weld without backing strip
c) Corner or those joints connecting two (2) members approximately at right angles to each other in the form of L or T.
d) Partial penetration welds of the groove type which are used for connections not subjected to external loading
e) Fillet welded joints of approximately triangular cross-section joining two (2) surfaces at approximately right angles to each other and having a throat dimension at least 70% of the thinner of the parts being joined but not less than 6mm.
f) Welds which are used to join lugs, brackets, stiffeners and other attachments.
g) Any other similar joint which is not specified above but may be encountered during fabrication

1.1 Welding Processes:

The following welding processes shall be used as per requirement:

Gas Tungsten Arc Welding (GTAW)

The root pass of single-sided groove welds without backing

Full penetration nozzle connection where other side is inaccessible
Any butt and fillet weld on equipment with thickness 5 mm or less
For all passes of butt and fillet welding of nozzles on equipment

Shielded Metal-Arc Welding (SMAW) or Submerged Arc Welding (SAW)

Maximum weld deposit per pass shall be 12.7 mm for carbon steel and 9.5 mm for other materials.

Gas Metal Arc Welding (GMAW) and Flux Cored Arc Welding (FCAW) processes can also be used based on requirement.

Other processes such as plasma-arc and electro-slag welding may be used only with the approval of the PURCHASER and depending upon the process and application proposed. These processes may require testing in addition to that specified by the governing procedure qualification code.

1.2 Welding Consumables:

The SUPPLIER shall provide, at no additional cost, all the welding consumables such as electrodes, filler wires, flux, oxygen, acetylene, argon etc. in order to complete the welding in all respects. The consumables shall be from reputed and approved manufacturers. All the consumables shall be approved by the PURCHASER.

The electrodes and filler wires shall be chosen from approved welding specification chart.

Electrode type selection, position, current, polarity..etc shall meet the standard requirements and electrode manufacturer recommendations.

For welding of all grades of steel by the GTAW process, a 2% thoriated tungsten electrode conforming to SFA-5.12-86 EWTh-2 (AWS-A5.12-80, EWTh-2) classification shall be used.

All electrodes to be used on carbon steel shall conform to ASME BPV Code Section II part C or any other equivalent code.

Electrodes from either ESAB or Ador welding (fresh stock) only to be used for fabrication works.

Electrodes qualification test records shall be submitted for the PURCHASER'S approval. The supplier shall also submit batch test certificates from the electrodes manufacturer for physical and chemical tests.

Electrodes shall be in sealed containers and adequate care shall be taken for storage strictly in accordance with the manufacturer's recommendations.

Electrodes, which have been removed from the original containers, shall be kept in baking ovens as per the manufacturer's recommendations and, once these are taken out, shall be consumed within the time limits stipulated by the manufacturer. Care shall be taken in handling the electrodes to prevent any damage to the flux covering. Electrodes with damage to coating shall not be used. Portable ovens shall be used for carrying the electrodes from the main oven to the field.

Electrodes of different specifications shall be stored in different compartments of a baking oven to avoid mix up. Electrodes shall remain identified until consumed.

The electrodes, filler wires and flux used shall be free from contamination such as rust, oil, grease and such foreign matter.

The specification and size of the electrodes, voltages and amperages, thickness of beads and number of passes shall be as specified in the approved welding procedure or otherwise agreed in writing.

Only basic coated electrodes shall be used, which deposit weld metal having the same or higher physical properties and similar chemical composition to the members being joined.

Low hydrogen electrodes shall be used for weld joints in carbon steel if the wall thickness exceeds 19 mm. It is preferable to produce low hydrogen electrodes in hermetically sealed containers and preserve them without damage to the containers.

All low hydrogen electrodes, after baking as per the manufacturer's recommendations, shall be stored in ovens kept at 80 to 100°C before being used. Recommendations of the electrode manufacturer shall be strictly followed.

1.3 Welding Qualifications:

Qualification of the welding procedures to be used and the performance of welders and welding operators shall conform to the requirements of the BPV

Codes and Section IX. For equipment under the purview of IBR, these shall also meet the requirements of IBR.

No production welds shall be undertaken until the qualification requirements are completed to the satisfaction of the PURCHASER.

When impact testing is required by the code or by the specification, these requirements shall be met in qualifying welding procedures.

The SUPPLIER shall be responsible for qualifying any welding procedure, welders and welding operators intended to be deployed. The SUPPLIER shall submit the welding procedure specification (WPS) for acceptance by the PURCHASER. After approval by the PURCHASER, the procedure qualification test shall be carried out by the SUPPLIER, at his own expense, duly witnessed by the PURCHASER. A complete set of test results, in specified format, shall be submitted to the PURCHASER for approval immediately after successful completion of procedure qualification test. All tests as required by the BPV code Section IX or IBR shall be carried out. The WPS shall require re-qualification, if any of the essential variables of supplementary variable is altered. Only those welders and welding operators who are qualified shall be deployed on the job.

Welders and welding operators shall always keep their identification cards with them and shall produce them on demand. The SUPPLIER shall issue the identity cards after the same are duly certified by the PURCHASER Welder or welding operator, who is not in possession of the identity card, shall not be allowed to work.

The SUPPLIER shall use forms as per BPV code, section IX, form QW-482, form QW-483 and form QW-484. Other forms are also acceptable subject to approval by the PURCHASER.

Unless agreed otherwise, the SUPPLIER shall advise the PURCHASER, in writing, at least one (1) week before any welder or welding operator is deployed on the work, the names and qualification of the proposed welders, welding operators and welding supervisors. It shall be the VENDOR/CONRTRACTOR'S responsibility to ensure that all welders and welding

operators employed by him or his SUB-VENDORS/SUBCONTRACTORS at works or at site are fully qualified as required by the code. Each welder and welding operator shall qualify for all types of welds, positions and materials or material combinations he may be called upon to weld.

Should the PURCHASER require to qualify or re qualify any welder or welding operator, the SUPPLIER shall make available, at no extra cost to the PURCHASER which includes for the men, equipment and materials for the tests. The cost, of testing the welds shall be borne by the SUPPLIER.

Welding supervisors shall have qualifications such as engineering degree or engineering diploma in welding technology with adequate knowledge of welding consumables welding machines & NDE and a minimum of five (5) years of experience in supervising welding of joints.

All welding, including the tacking up of welds shall be carried out by qualified welders and welding operators as per approved WPS. Any weld made by other than a qualified welder or welding operator or not carried out as per approved WPS shall be cut out and re-welded.

For purpose of identification and to enable tracing full history of each joint, each welder and welding operator employed on the work shall be given a designation. The welder and welding operator’s designation and the date on which the joint is made, shall be stamped near the relevant joint and on the relevant drawings also. Copies of the drawings so marked shall be furnished to the PURCHASER for record purposes.

For each welder and welding operator, a record card shall be maintained showing the procedures for which he is qualified. These cards shall note the production welds, the date of the welding done, the type of defects produced and their frequency. The record shall be reviewed once in a week by the PURCHASER and those welders & welding operators whose work required a disproportionate amount of repair shall be disqualified from welding. Requalification of welders and welding operators disqualified more than three (3) times shall be entirely at the discretion of the PURCHASER. As far as possible, the qualification shall be carried out at the location (site or shop) where the actual fabrication and welding work is to be carried out.

1.4 Preparation For Welding:

Surface to be welded shall be smooth uniform and free from fins, tears and other defects, which would adversely affect the quality of the weld. All welding faces and adjoining surfaces, for a distance of at least 50 mm from the edge of the welding groove or 12 mm from the toe of the fillet in the case of fillet welded joints, shall be thoroughly cleaned of rust, scale, paint, oil or grease, on both inside and outside.

Joints for welding shall be as per the tender specifications and approved fabrication drawings.

Butt joints shall be prepared as per ASME BPV code Section VIII Division 1, unless specified otherwise. For equipment under the purview of IBR, these shall be as per IBR. Any other end preparation which meets the WPS is acceptable.

Internal misalignment shall be reduced by trimming but such trimming shall not reduce the finished wall thickness below the required minimum wall thickness. Trimming shall not be abrupt. It shall be tapered with a minimum slope of 1:3. Root opening of the joint shall be within the tolerance limits of the WPS.

Welds shall be as per ASME BPV code section VIII Division 1 or in accordance with IBR for equipment under the purview of IBR

Reinforcing pads and saddles shall have a good fit with the parts to which they are attached. A tell-tale hole shall be provided on the side of any pad or saddle to reveal leakage in the weld and to allow venting during welding and heat treatment. Pad or saddle shall be added, after the branch weld has undergone satisfactory visual and NDE.

The ends shall be prepared by machining, grinding, flame cutting or plasma cutting. Where flame cutting is used, the effect on the mechanical and metallurgical properties of the base metal shall be taken into consideration. Unless otherwise specified on drawings, all fillet welds shall be 50% of the

minimum plate thickness and shall be on both sides of the plate. Also, the weld shall be continuous.

Liquid Penetrant (PT) testing shall be carried out to ensure soundness of edges. However, flame cutting of carbon steel is permitted. Wherever practicable, flame cutting shall be carried out by machine shall be cleaned free of slag. Manual flame cutting shall be permitted only where machine flame cutting is not practicable and with the approval of the PURCHASER, and such surfaces shall be ground or dressed to a smooth finish as required by the specification and to the satisfaction of the PURCHASER. Slag, scale or oxides shall be removed by grinding to bright metal at least two (2) mm beyond the burnt area.

Before fitting up the critical weld joints, the profile and dimensions of the weld end preparation shall be checked by the Purchaser. Fit-ups shall be examined by the PURCHASER prior to welding the root pass.

1.5 Technique & Workmanship:

Components to be welded shall be aligned and spaced as per the requirements of the code and WPS.

Alignment and spacing shall be achieved using suitable wires to maintain the gap. These shall be removed after tack welding. The ends to be welded shall be held using suitable clamps, yokes or other devices which will not damage the surfaces in any manner. It shall be ensured that welding operations do not result in distortions.

Earthing shall be provided on the job using earthing clamps of similar material as the job. Earthing shall not be given through welding rotators.

Tack welds at the root joint, for maintaining joint alignment, shall be made only by qualified welders or welding operators and with filler metal equivalent to that used in the root pass. Tack welds shall be fused with the root pass weld, except that those which have cracked shall be removed. Peening is prohibited on the root and final passes of a weld. The required preheat shall be maintained prior to tack welding. Means shall be made available to measure preheat temperature.

No welding shall be carried out if there is any impingement in the weld area of rain, snow, excessive wind or if the weld area is wet.

Irrespective of the class of steel, root runs shall be made without interruption other than of changing electrodes or to allow the welder or welding operator to reposition himself. Root runs made in the shop may afterwards be allowed to cool by taking suitable precautions to ensure slow cooling e.g. by wrapping in a dry asbestos blanket. Welds made at site shall not be allowed to cool until the thickness of weld metal deposited exceeds one third of the final weld thickness or 10 mm, whichever is greater.

Welding-on bridge pieces and temporary attachments shall preferably be avoided. Where approved by the PURCHASER, these may be used. Material of these shall be compatible with material with which they are temporarily welded. All such pieces shall be removed after welding of joints and the weld area ground flush. These areas shall be subjected to PT examination. These pieces shall be welded by qualified welders & welding operators and with electrodes compatible with the parent material. The preheating requirements of material shall be applied and maintained during the welding of attachments. These temporary attachments shall be removed by grinding, chipping, sawing or by arc or flame gouging. When arc or flame gouging is used, at least three (3) mm of metal shall be left around the surface which shall be removed by grinding. This metal shall not be removed by hammering or by use of force.

The arc shall be struck only on those parts of parent metal where weld metal is to be deposited. When inadvertent arc-strikes are made on the base metal surfaces outside the joint groove, the arc-strikes shall be removed by grinding and shall be examined by PT procedures.

Argon gas used in GTAW process for shielding and purging shall be at least 99.95% pure. Purging shall be carried out at a flow rate depending on diameter until at least five (5) times the volume between dams is displaced. In no case shall the initial purging period be less than 10 minutes. After initial purging, the flow of backing gas shall be reduced to a point where only a slight positive pressure prevails. Any dams used in purging shall be fully identified and removed after welding and accounted for in order to avoid leaving them in the system. The rate of flow for shielding purposes shall be established in the procedure qualification.

Thorough check shall be exercised to maintain the required inter-pass temperature.

All equipment necessary to carry out the welding, for supporting the work, for preheating including thermal insulation for retaining the heat and for the protection of the welder & welding operator shall be provided by the SUPPLIER at no extra cost. All necessary precautions shall be taken during cutting and welding operations. It shall be ensured that proper ventilation is available in the welding area and adequate protective gear such as goggles, masks, gloves, protection for the ears and body are used at all times. For guidelines refer ASME standard Z49.1, "Safety in Welding and Cutting".

After deposition, each layer of weld metal shall be cleaned with a wire brush to remove all slag, scale and defects, to prepare for the proper deposition of the next layer. The material of wire brush shall be compatible with parent material. Special care shall be taken to secure complete and thorough penetration of the fusion zone into the bottom of the weld. It is recommended that the root run be checked by PT procedures for critical equipment.

No welding or welded parts shall be painted, plated, galvanised or heat treated until inspected and approved by the PURCHASER. Welds shall be prepared and ground in such a way that the weld surfaces merge smoothly into the base metal surface, particularly for welds which are to undergo NDE.

Repair of weld metal defects shall meet the requirements of the code. Any weld repair shall be subject to the approval of the PURCHASER.

In the event of several unsuccessful repair attempts or if the PURCHASER feels that a satisfactory repair is not feasible, the joint shall be completely remade.

Welded joints, more specifically longitudinal welds, shall be placed not closer than 50 mm to opening or branch welds, reinforcements, attachment devices or from supports etc. The longitudinal welds of two adjacent components shall be staggered by at least 30°. The minimum distance between welds shall be 5 0 mm or eight (8) times the wall thickness, whichever is greater. Intersection of welds shall be avoided as far as possible. In case of any deviation observed

in the drawing on this aspect, same shall be referred to purchase for necessary approval.

1.6 Inspection & Testing:

The PURCHASER shall have free access to inspect welding or any other related operations at any time and at any stage of fabrication.

The SUPPLIER shall inform the PURCHASER when the weld preparation and set-up for welding of various members selected by the PURCHASER are in progress so that the PURCHASER can inspect the assembly before welding starts.

The responsibilities of the PURCHASER's representative shall in no way reduce the SUPPLIER's responsibilities to ensure that the work is carried out in accordance with the specification.

1.7 Examination of Welds:

Examination refers to the quality control functions performed by the SUPPLIER during fabrication, erection and testing.

As a minimum, the following shall be examined by visual examination:

a) Materials and components to ensure that these are as per the specification and free from defects.
b) Joint preparation and cleanliness
c) Fit-up, joint clearance and internal alignment prior to joining
d) Preheating, if applicable
e) Variables specified by the welding procedure, including filler material, position and electrode.
f) Condition of the root passes after cleaning- external and where accessible, internal also.
g) Slag removal and weld condition between passes
h) Appearance of the finished joint and weld dimensions

1.8 Qualification And Certification Of NDE Personnel:

Approved and documented PT (Dye Penetrant Test) procedure prepared by qualified personnel shall be made available.

The SUPPLIER's examining personnel shall have training and experience commensurate with the needs of the specified examinations. PT executing supervisors/examiners shall have qualification to meet ASME BPV Code Section V specifications.

1.9 Methods Of Examination:

The methods of PT examination used shall be in accordance with ASME BPV Code Section V.

1.10 Repair Welding After PT:

All defects in welds requiring repair shall be removed by flame or arc gouging, grinding, chipping or machining.

The major repairs may involve:

a) Cutting through the weld
b) Cutting out a portion of material containing the weld, or
c) Removing the weld metal down to the root depending upon the magnitude of the defects.

After removing the defect, the repaired portion and adjacent area shall be examined by the same NDE methods as specified for the original weld and the same acceptance criteria shall hold good.

All the repair welds shall be made using the same or other specified welding procedures as those used in making the original welds

FCVRP REPLACEABLE PART DRAWINGS (FOR TENDERING PURPOSE ONLY)

Sl No	Description	Drawing No	Sheet
1	**General assembly of FCVRP-1 for PSLV in SSAB**	10-04-200-06-02-61/A1/R1	1of 3
2	Replaceable Platform	10-04-200-06-02-61/A1/R1	2 of 3
3	Cut-out covers	10-04-200-06-02-61/A1/R1	3 of 3
4	**General assembly of FCVRP-1 for GSLV in SSAB**	10-04-200-06-02-62/A1/R1	1 of 7
5	Details of beam type No 1,2,3,4 & 5	10-04-200-06-02-62/A1/R1	2 of 7
6	Details of sliding Platform Type-1	10-04-200-06-02-62/A1/R1	3 of 7
7	Details of sliding Platform Type-2	10-04-200-06-02-62/A1/R1	4 of 7
8	Part Details of sliding mechanism	10-04-200-06-02-62/A1/R1	5 of 7
9	Chequered Plate	10-04-200-06-02-62/A1/R1	6 of 7
10	Cut-out covers	10-04-200-06-02-62/A1/R1	7 of 7
11	**General assembly of FCVRP-2 for GSLV in SSAB**	10-04-200-06-02-63/A1/R1	1 of 7
12	Details of beam type No 1,2,3,4 & 5	10-04-200-06-02-63/A1/R1	2 of 7
13	Details of sliding Platform Type-1	10-04-200-06-02-63/A1/R1	3 of 7
14	Details of sliding Platform Type-2	10-04-200-06-02-63/A1/R1	4 of 7
15	Part Details of sliding mechanism	10-04-200-06-02-63/A1/R1	5 of 7
16	Chequered Plate	10-04-200-06-02-63/A1/R1	6 of 7
17	Cut-out covers	10-04-200-06-02-63/A1/R1	7 of 7

Note: Final fabrication drawings will be issued along the work order /purchase order.

Signature of the tenderer for accepting of specification mentioned above.

GENERAL PARTICULARS

1. Bidder shall not alter the contents of this schedule of prices. If bidder wants to add / alter anything, it shall be brought out separately in the format as given separately as section E.
2. Equipment and material to be supplied and erected shall be in accordance with sections A & B of this document.
3. The quoted price shall be the price in Indian Rupees for procurement / manufacture, stage inspection, assembly & final inspection at tenderer's works, packing, forwarding, transportation to SDSC SHAR, transit insurance, unloading/receipt at SDSC SHAR, storage / handling, erection and carrying out performance test at SDSC SHAR inclusive of all taxes and duties as applicable except sales tax on finished products, and service tax which shall be separately indicated in the price bid.

SCHEDULE OF PRICES

S.No.	ITEM	QTY.	COST IN(Rs.)
1	Procurement of raw material , Manufacturing & Assembly of FCVRP replaceable parts at works, packing, forwarding & transportation to SDSC SHAR, transit insurance, unloading/ receipt and storage & handling as per the enclosed specifications, but excluding taxes and duties for following:	1 lot (lump sum)	
	A) Mild steel-58.051t		
	B) Aluminum-1018 kg		
2	CST/VAT on total supply price @ _____% applicable		
3	Erection & Commissioning of FCVRP replaceable parts at SDSC SHAR as per the enclosed specifications, but excluding taxes and duties	1 lot (lump sum)	
4	Service Tax on total erection, testing & commissioning @ _____% applicable		
5	Any other taxes and duties		
Total cost			

Signature of the tenderer for accepting of specification mentioned above.

EXCEPTIONS AND DEVIATIONS (SECTION:E)

In line with the specifications document (sections A, B & C), Bidder may stipulate exceptions and deviations to the proposed conditions if considered unavoidable.

S.No.	Reference in Specification		Specification as given in the document	Bidder's offered specification	Deviation
	Page no.	Clause no.			

NOTE :

Only deviations are to be written in the above form.

Any deviations taken by the bidder to the stipulations of the specifications document shall be brought out strictly as per this format and enclosed along with the bid.

Any deviations not brought out in this proforma and written elsewhere in the document will not be recognised and the same is treated as null and void.

Any willful attempt by the bidder to camouflage the deviations by giving them in the covering letter or in any other document that are enclosed may render the bid itself non-responsive.

Signature:
Name:
Designation:

Seal of the company Date:

Signature of the tenderer for accepting of specification mentioned above.

Spec No: VALF/SLP/SSAB/FCVRP REPLACEABLE PARTS	**SECOND LAUNCH PAD**	SECTION: F
	FCVRP REPLACEABLE PARTS CHECK LIST	SHEET: 1 OF 1

Sl no	**DESCRIPTION**	**RESPONSE BY SUPPLIER**
1	The detailed scope of work & technical specifications are understood and price is quoted accordingly	Yes / No
2	Submitted Techno-Commercial and price bids separately	Yes / No
3	Confirmation on not mentioning the price details in Techno-commercial bid	Yes / No
4	List of excise duty exemption certificate (EDEC) items are submitted for providing EDEC by department.	Yes / No
5	VAT/CST is indicated in percentage (if not mentioned, it will be assumed that the price quoted is inclusive of taxes)	Yes / No
6	Service tax 14% or at prevailing rates (if not mentioned , it will be assumed that the price quoted is inclusive of all taxes)	Yes / No
7	Validity of offer is for 4 months (minimum)	Yes / No
8	Accepted the department payment terms	Yes / No
9	Warranty for 12 months	Yes / No
10	Payment of Rs 1,00,000/- towards Earnest money Deposit (EMD) in the form of Demand Draft / Pay order drawn in favour of Accounts officer, SDSC SHAR has been complied.	Yes / No
11	10% of the order value will be submitted as performance bank guarantee, which will be valid till completion of warranty period+3 months claim period. 10% of order value will be submitted as security. BG will be submitted for advance payments.	Yes / No
12	Signing and stamping on each page of this document and submitting along with the offer	Yes / No
13	Acceptance for delivery schedule as 6 months (4 months for material procurement, fabrication & supply to SDSC SHAR and 2 month for erection)	Yes / No
14	Pre-qualification criteria are met and necessary documentation proof in meeting these criteria is attached.	Yes / No
15	Submission of schedule of deviations	Yes / No
16	The process fabrication and erection philosophy is complied.	Yes / No
17	Meeting statutory electrical norms complied	Yes / No

Name:

Designation:

Seal of the company Date:

Signature of the tenderer for accepting of specification mentioned above.

REF. DRG. NO. 10-04-200-06-02-62/A1/R1

COM. FILE NO. SCEND/X171/2015/RAGHU/OS

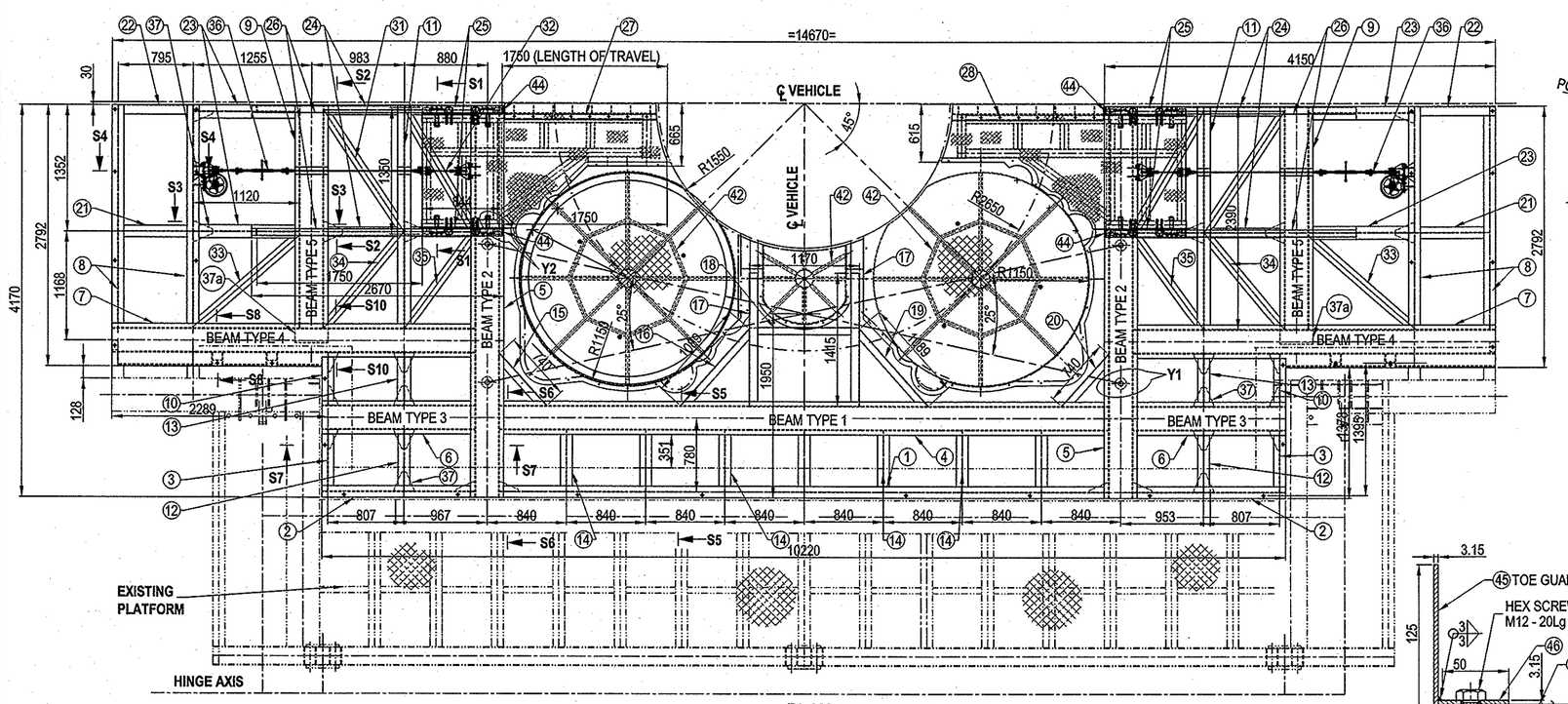

PLAN (WITH OUT CHEQ. PLATE)

(SLIDING PLATFORMS ARE IN OPEN CONDITION)

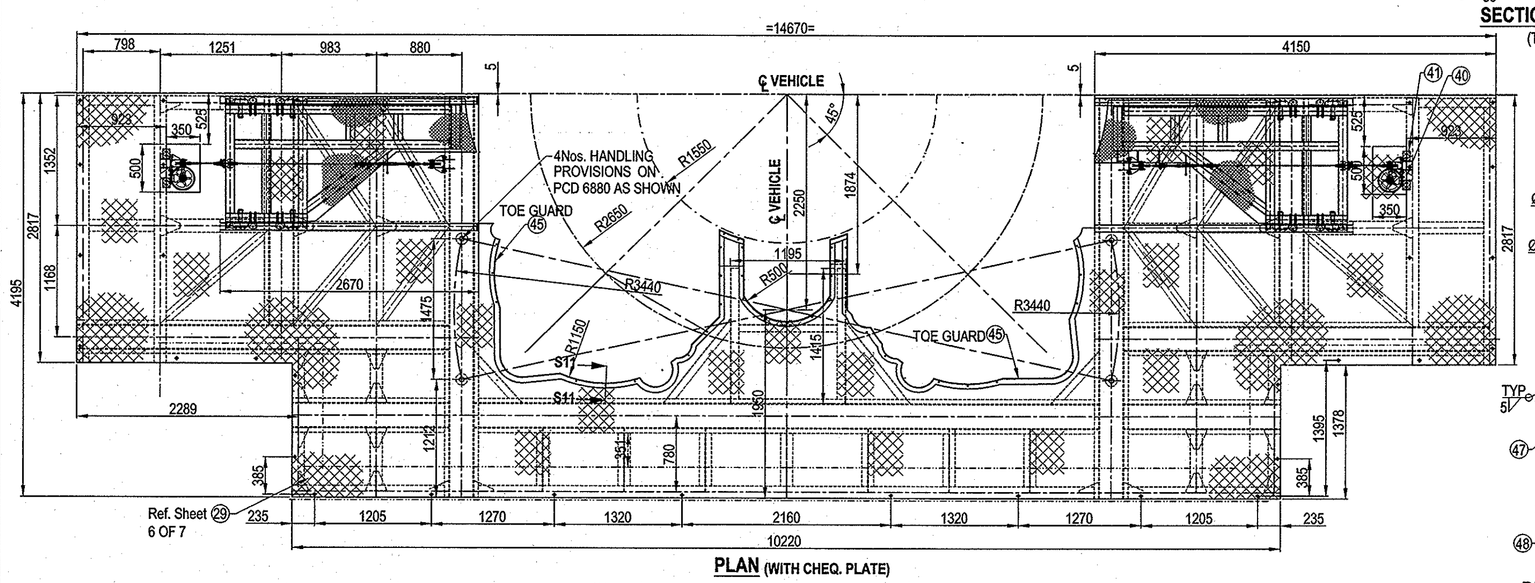

PLAN (WITH CHEQ. PLATE)

(SLIDING PLATFORMS ARE IN CLOSED CONDITION)

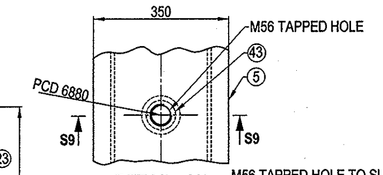

DETAIL - Y1

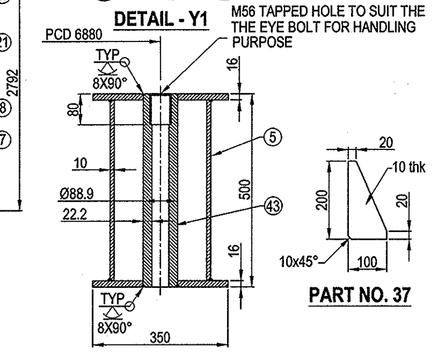

SECTION - S9S9

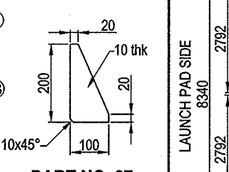

PART NO. 37

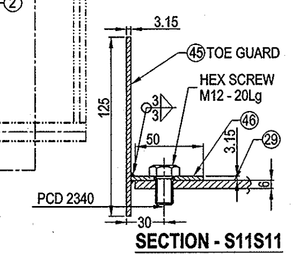

SECTION - S11S11

(TYPICAL)

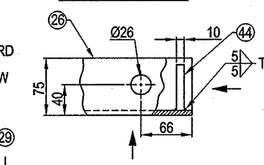

DETAIL - Y2

(STOPPER PLATE)

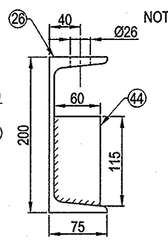

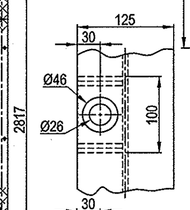

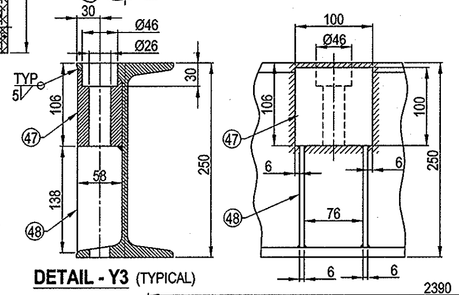

DETAIL - Y3 (TYPICAL)

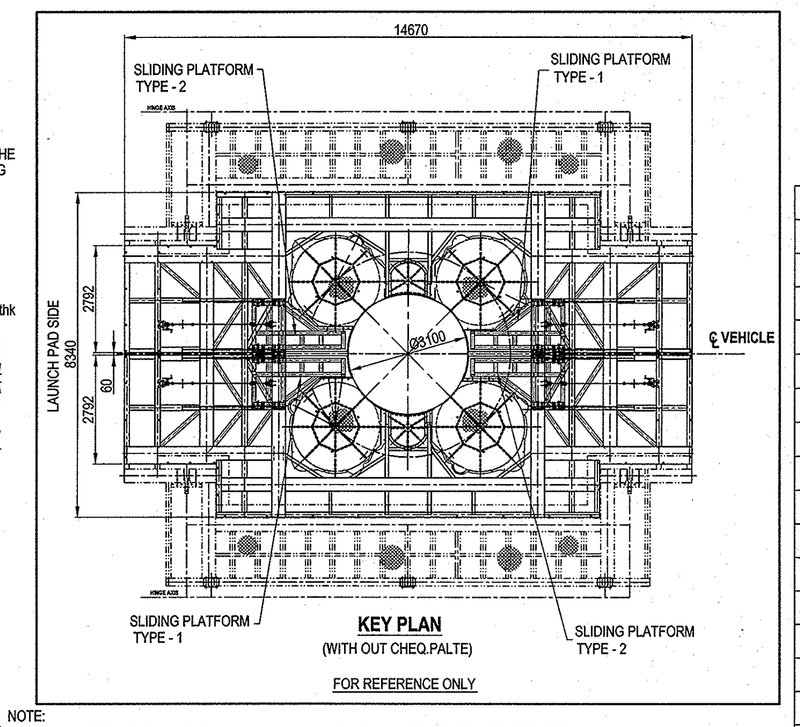

KEY PLAN

(WITH OUT CHEQ.PALTE)

FOR REFERENCE ONLY

NOTE:

1. ALL STRUCTURAL WELDS ARE OF 6 mm SIZE FILLET UNLESS OTHERWISE SPECIFIED
2. ALL WELD JOINTS SHALL BE DP TESTED FOR THE ROOT AND FINAL PASSES TO ENSURE WELD QUALITY
3. **THE BILL OF MATERIAL IS GIVEN FOR ONE ASSEMBLY ONLY & NO.OF ASSEMBLIES REQUIRED IS 2 (TWO)**
4. BOLT HOLE LOCATIONS WHICH ARE SHOWN ARE INDICATIVE ONLY. EXACT LOCATIONS SHALL BE CONSIDERED AS PER THE SITE CONDITION TO SUIT THE EXISTING INTERFACES.
5. THE PLATFORM SHALL BE PAINTED AS PER TENDER SPECIFICATIONS.
6. PROPER CARE IS TO BE EXERCISED DURING THE FABRICATION OF THE PLATFORMS, TAKING INTO ACCOUNT PROPER FIXTURES & TOOLS TO AVOID UNDUE DEFORMATIONS DURING WELDING TO GET THE FABRICATED PLATFORMS ASSEMBLED WITH THE EXISTING STRUCTURAL PLATFORMS
7. HANDLING OF THE PLATFORM SHALL BE CARRIED OUT BY THE 4 LEGGED SLING AS PER THE DRAWING NO 10-04-200-06-02-61/A1/R1 SHEET 1 OF 3
8. CHECK THE STATUS OF THE DRAWING BEFORE STARTING THE FABRICATION.

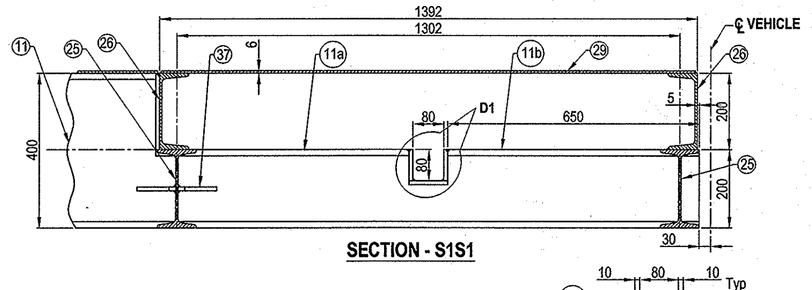

SECTION - S1S1

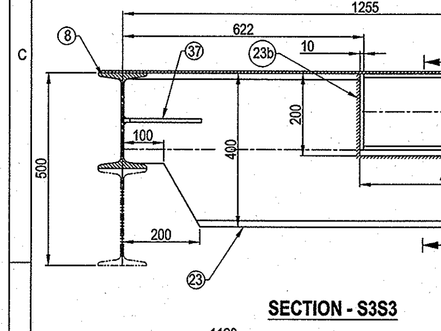

SECTION - S3S3

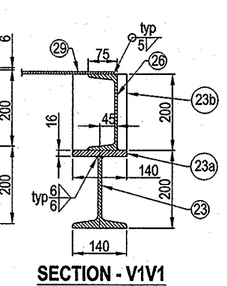

SECTION - V1V1

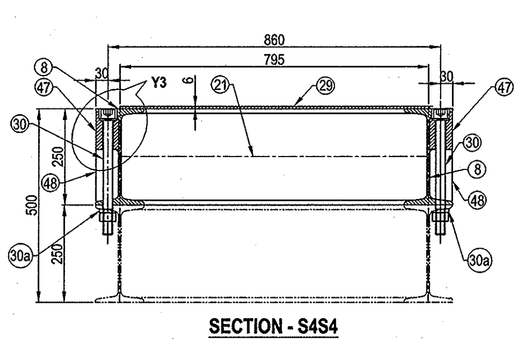

SECTION - S4S4

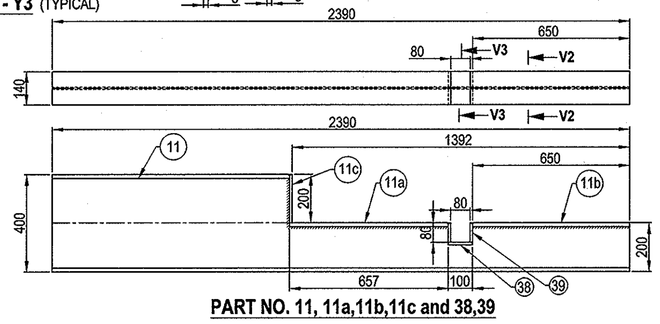

PART NO. 11, 11a,11b,11c and 38,39

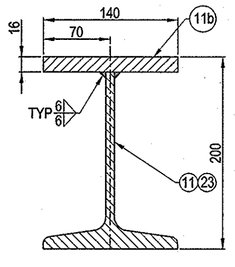

SECTION - V2V2

(TYPICAL)

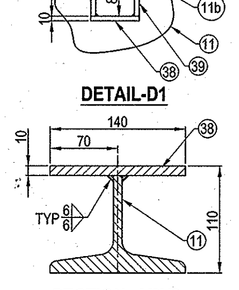

DETAIL-D1

SECTION - V3V3

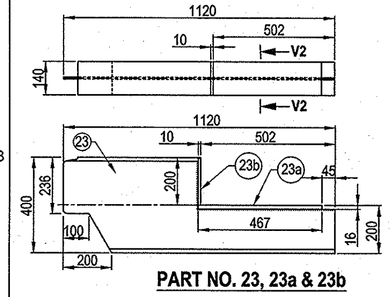

PART NO. 23, 23a & 23b

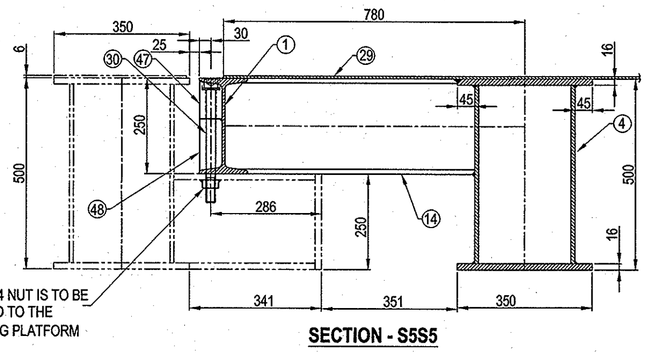

SECTION - S5S5

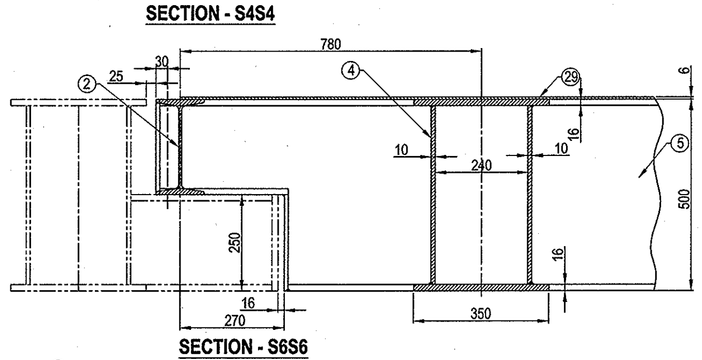

SECTION - S6S6

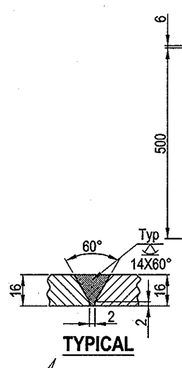

TYPICAL

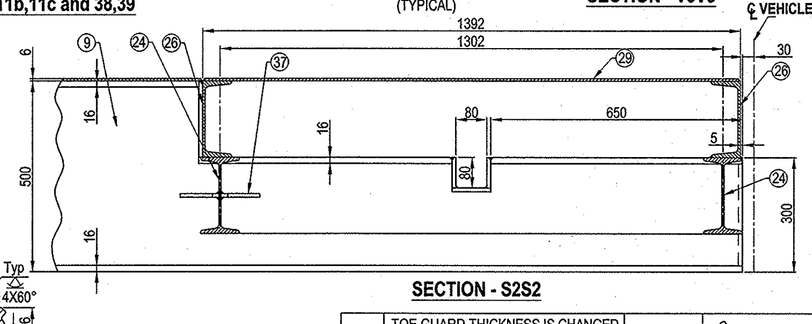

SECTION - S2S2

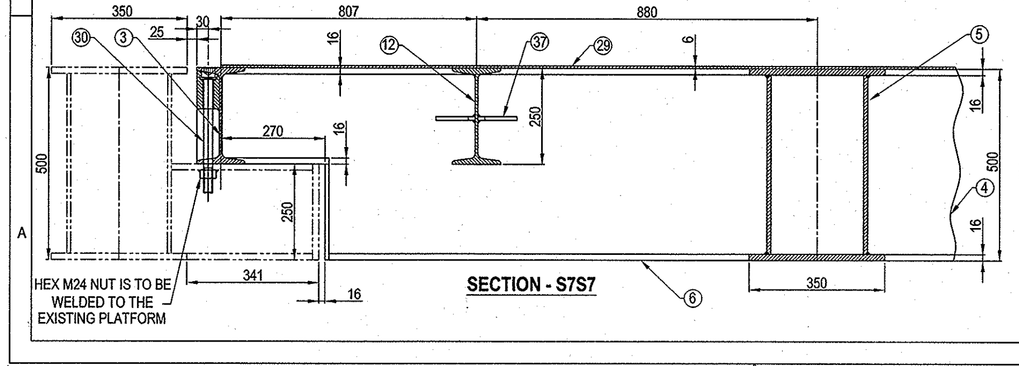

SECTION - S7S7

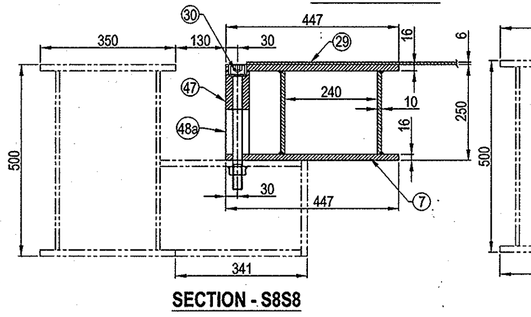

SECTION - S8S8

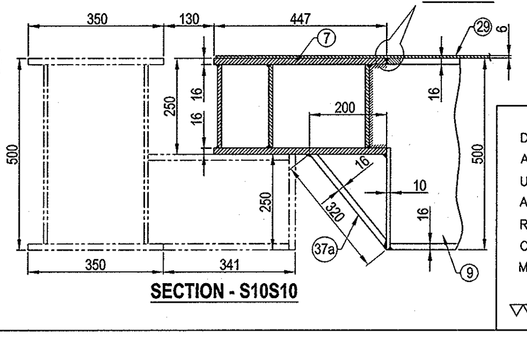

SECTION - S10S10

STATUS	SIGN	DATE
DISCUSSION/REVIEW		
TENDER PURPOSE		
FABRICATION		6/11/15

TOTAL WEIGHT: 10945 kg

S.NO	DESCRIPTION	MATERIAL	QTY	W.T	REMARKS
48a	STIFFENER 118X58X6THK	IS:2062 Gr-B	12	4	
48	STIFFENER 138X58X6THK	IS:2062 Gr-B	48	19	
47	BLOCK 100X100X58	IS:2062 Gr-B	30	137	
46	TOE GUARD BASE STRIP 13200X50X3.15THK	IS:1730	1	16	
45	TOE GUARD STRIP 13200X125X3.15THK	IS:1730	1	41	
44	STOPPER PLATE 115X60X10THK	IS:2062 Gr- B	4	2	
43	DIN PIPE OD 88.9X22.2THK - 500 Lg	DIN: 2448	4	73	
42	CUTOUT COVERS	IS:736	1	400	Ref. SHEET 7 OF 7
41	STEEL BUTT HINGE 100X75 - HEAVY	IS:1341	4		
40	CHEQ. PLATE 500X350X6THK	IS:2062 Gr- B	2	16	
39	PLATE 140X80X10THK	IS:2062 Gr- B	4	4	
38	PLATE 140X100X10THK	IS:2062 Gr- B	2	2	
37a	PLATE 350X320X16THK	IS:2062 Gr-B	2	28	
37	STIFFENER 200X100X10THK	IS:2062 Gr-B	40	63	
36	PART DETAILS OF SLIDING MECHANISM	IS:2062	2	144	Ref. SHEET 5 OF 7
35	ISMB 200 - 1276Lg	IS:808	2	62	
34	ISMB 200 - 1338Lg	IS:808	2	65	
33	ISMB 200 - 1497Lg	IS:808	2	72	
32	ISMB 200 - 1495Lg	IS:808	2	72	
31	ISMB 200 - 1550Lg	IS:808	2	75	
30a	TAPER WASHER FOR M24 BOLT	IS: 5372	12		
30	HEX SOCKET HEAD BOLT M24X3 - 300 Lg THREAD LENGTH - 60 mm WITH NUT & WASHER	IS:2269	30		8.8 CLASS
29	CHEQ. PLATE	IS:3502	1	1827	Ref. SHEET 6 OF 7
28	SLIDING PLATFORM TYPE-2	IS:2062 Gr- B	1	358	Ref. SHEET 4 OF 7
27	SLIDING PLATFORM TYPE-1	IS:2062 Gr- B	1	369	Ref. SHEET 3 OF 7
26	ISMC 200 - 2870 Lg	IS:808	4	238	
25	ISMB 200 - 746 Lg	IS:808	4	72	
24	ISMB 200 - 849 Lg	IS:808	4	82	
23b	PLATE 200X140X10THK	IS:2062 Gr-B	4	9	
23a	PLATE 467X140X16THK	IS:2062 Gr-B	4	33	
23	ISMB 400 - 1120 Lg	IS:808	4	188	
22	ISMC 250 - 787 Lg	IS:808	2	48	
21	ISMB 250 - 787 Lg	IS:808	2	59	
20	ISMC 150 - 740 Lg	IS:808	1	12	
19	ISMC 150 - 1090 Lg	IS:808	1	18	
18	ISMC 300 - 1155 Lg	IS:808	1	43	
17	ISMC 300 - 1415 Lg	IS:808	2	103	
16	ISMC 150 - 1090 Lg	IS:808	1	18	
15	ISMC 150 - 740 Lg	IS:808	1	12	
14	ISMB 250 - 646 Lg	IS:808	7	168	
13	ISMB 400 - 548 Lg	IS:808	2	67	
12	ISMB 250 - 646 Lg	IS:808	2	48	
11c	PLATE 200X140X10THK	IS:2062 Gr-B	2	4	
11b	PLATE 650X140X16THK	IS:2062 Gr-B	2	23	
11a	PLATE 657X140X16THK	IS:2062 Gr-B	2	23	
11	ISMB 400 - 2390 Lg	IS:808	2	203	
10	ISMB 250 - 548Lg	IS:808	2	41	
9	BEAM TYPE - 5 - 2390 Lg	IS:2062 Gr- B	2	730	Ref. SHEET 2 OF 7
8	ISMB 250 - 2390 Lg	IS:808	4	356	
7	BEAM TYPE 4 - 3855 Lg	IS:2062 Gr- B	2	1244	Ref. SHEET 2 OF 7
6	BEAM TYPE 3 - 1620 Lg	IS:2062 Gr- B	2	500	Ref. SHEET 2 OF 7
5	BEAM TYPE 2 - 4170 Lg	IS:2062 Gr- B	2	1302	Ref. SHEET 2 OF 7
4	BEAM TYPE 1 - 6460 Lg	IS:2062 Gr- B	1	1042	Ref. SHEET 2 OF 7
3	ISMB 250 - 646 Lg	IS:808	2	48	
2	ISMB 250 - 1620 Lg	IS:808	2	121	
1	ISMB 250 - 6460 Lg	IS:808	1	241	

R	REVISIONS	ZONE	SIGN & DATE
R1	TOE GUARD THICKNESS IS CHANGED FROM 6 mm TO 3 mm	E5	6/11/15
	PART Nos. 47 & 48 AND DETAIL - Y3 IS ADDED	D4	
	PART Nos. 15 & 20 LOCATIONS ARE MODIFIED	F7	
	SLIDING MECHANISM IS MODIFIED	F8	

DO NOT SCALE THE DRAWING
ASK IF IN DOUBT
UNLESS OTHERWISE SHOWN
ALL DIMENSIONS ARE IN MILLIMETERS
REMOVE SHARP EDGES & BURRS
CHAMFER 1 M.M. X 45°
MACHINING FINISH IN MICRONS :-
▽ 8 – 25 ▽▽ 1.6 – 8
▽▽▽ 0.025 – 1.6 ▽▽▽▽ < 0.025

DEVIATION FOR NON TOLERANCED DIMENSIONS (IS –2102)

DIAMETERS & LENGTHS	
UPTO & INCL. 6	+0.1
6 – 30	+0.2
30 – 120	+0.3
120 – 315	+0.5
315 – 1000	+0.8
1000 – 2000	+1.2
2000 – 4000	+2.0
4000 & ABOVE	+3.0

LENGTH IN M.M. OF SHORTER SIDE OF ANGLE UPTO & INCL.	
1– 6	± 1'–0d
6– 30	± 0'–3d
30–120	± 0'–2d
120–400	± 0'–1d

SCEND & ASG

DESIGNED		6.11.15
DES.CHKD		
DRAWN	RAGHU	
DRG.CHKD		
APPROVED		
	SIGN.	DATE

TITLE

GENERAL ASSEMBLY OF FCVRP-1 FOR GSLV IN SSAB

SATISH DHAWAN SPACE CENTRE

SHAR CENTRAL DESIGNS

I.S.R.O SRIHARIKOTA

PROJECTION

SCALE 1:50

DRG. NO. 10-04-200-06-02-62/A1/R1

SHEET 1 OF 7

SCEND/X171/2015/RAGHU/OS

REF. DRG. NO. 10-04-200-06-02-62/A1/R1

COM. FILE NO. SCEND/X172/2015/RAGHU/OS

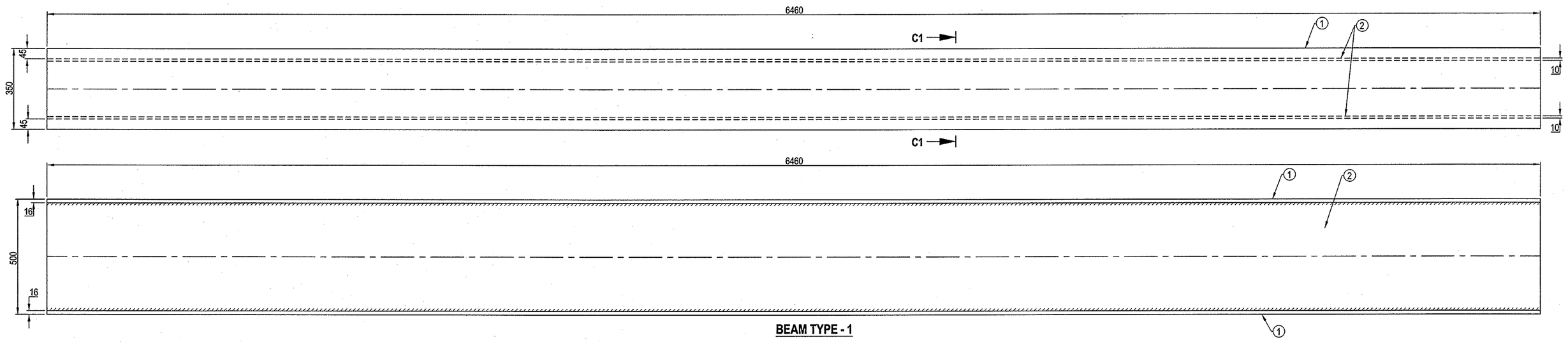

BEAM TYPE - 1

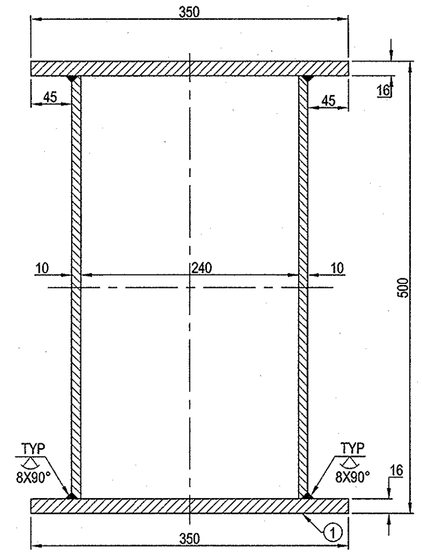

SECTION - C1C1
(TYPICAL)

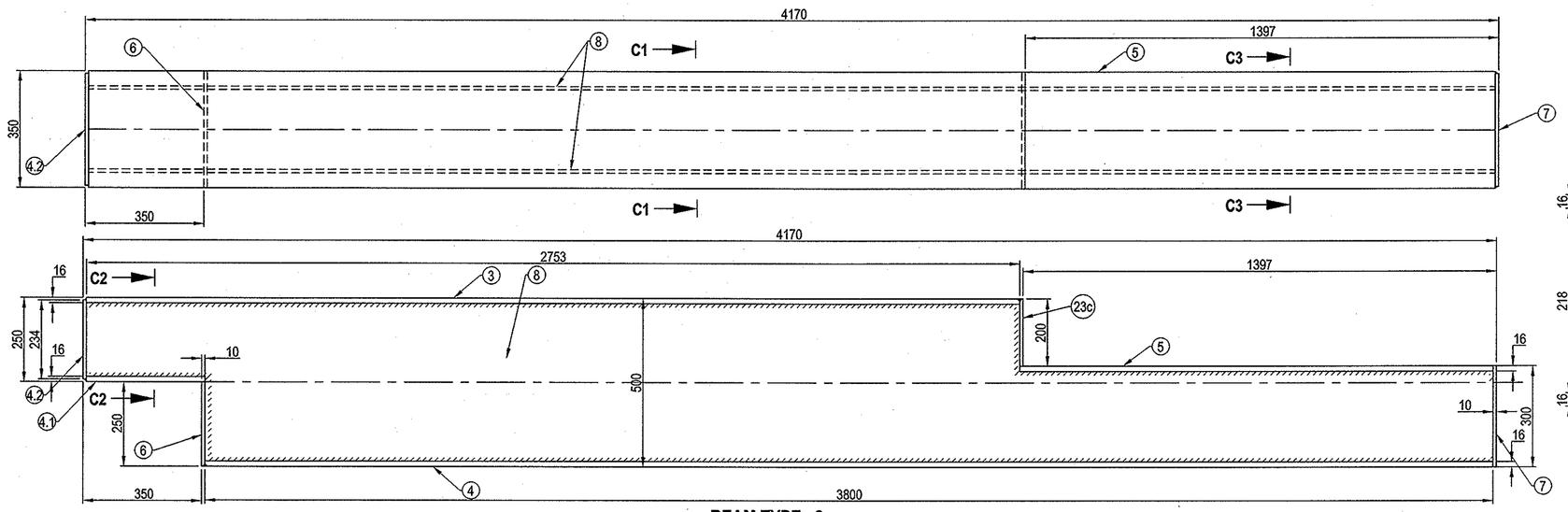

BEAM TYPE - 2

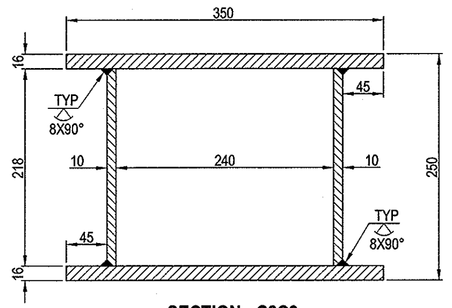

SECTION - C2C2
(TYPICAL)

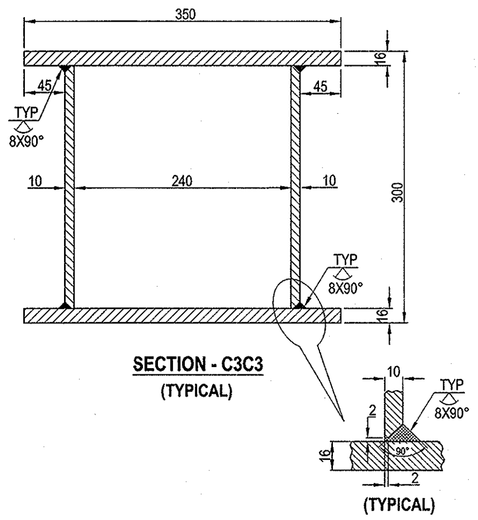

SECTION - C3C3
(TYPICAL)

STATUS	SIGN	DATE
DISCUSSION/REVIEW		
TENDER PURPOSE		
FABRICATION		6/11/15

NOTE:
1. ALL WELDS ARE OF 8 mm SIZE FILLET UNLESS OTHERWISE SPECIFIED
2. ALL WELD JOINTS SHALL BE DP TESTED FOR THE ROOT AND FINAL PASSES TO ENSURE WELD QUALITY
3. CHECK THE STATUS OF THE DRAWING BEFORE STARTING FABRICATION.

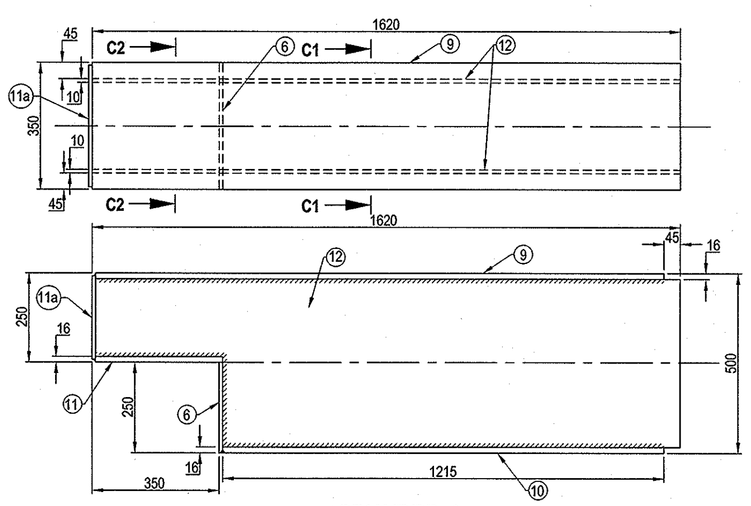

BEAM TYPE - 3

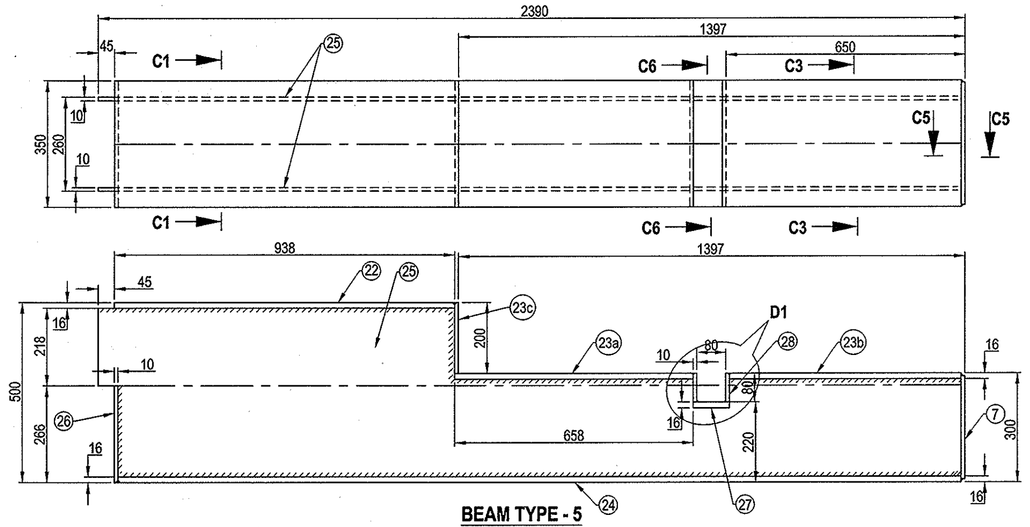

BEAM TYPE - 5

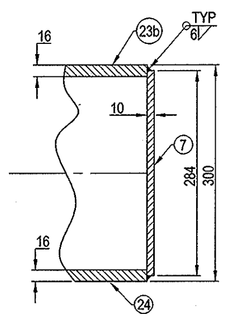

SECTION - C5C5
(TYPICAL)

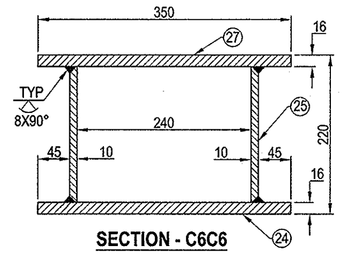

SECTION - C6C6

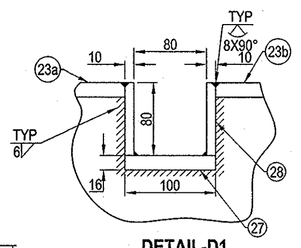

DETAIL-D1

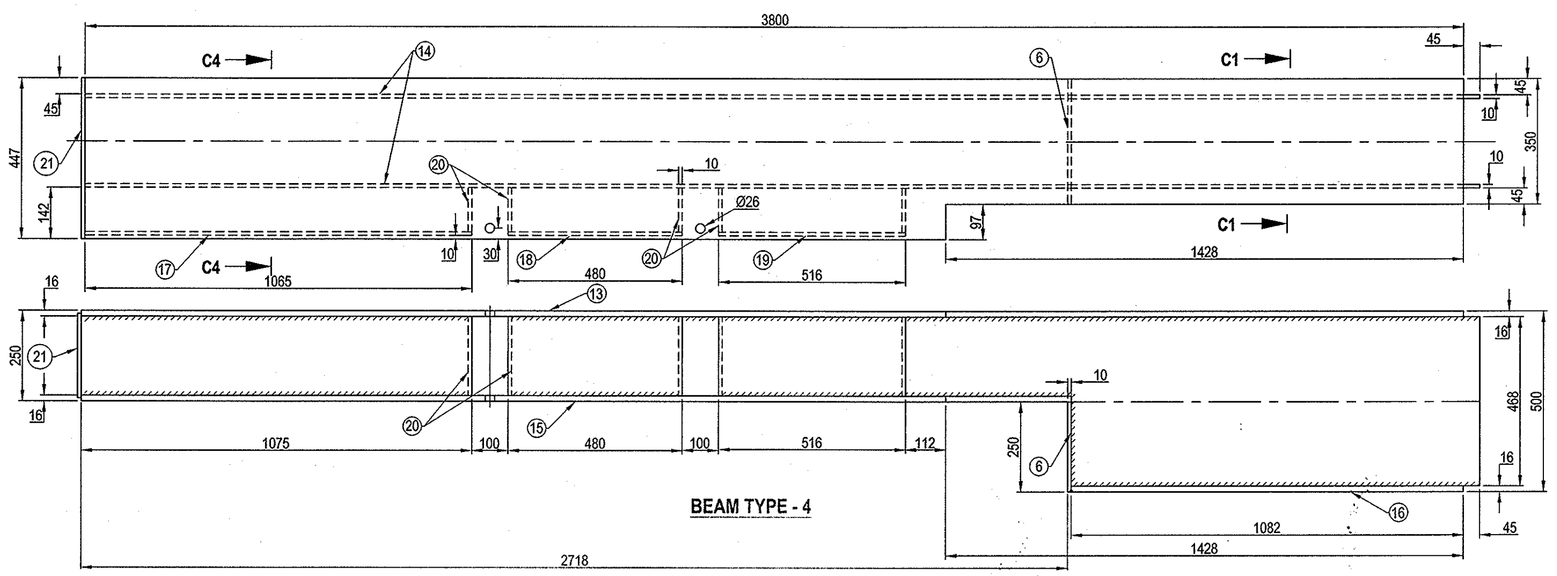

BEAM TYPE - 4

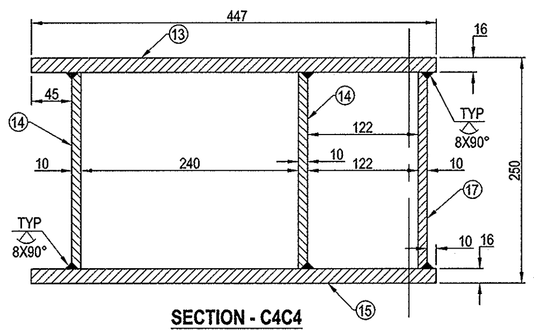

SECTION - C4C4
(TYPICAL)

S.NO	DESCRIPTION	MATERIAL	QTY	W.T	REMARKS
BEAM TYPE - 5					
28	PLATE 350X80X10THK	IS:2062 Gr-B	2	4	Weight : 365
27	PLATE 350X100X16THK	IS:2062 Gr-B	1	4	
26	PLATE 350X266X10THK	IS:2062 Gr-B	1	7	
25	PLATE 2390X468X10THK	IS:2062 Gr-B	2	132	
24	PLATE 2345X350X16THK	IS:2062 Gr-B	1	103	
23c	PLATE 200X350X10THK	IS:2062 Gr-B	3	16	
23b	PLATE 650X350X16THK	IS:2062 Gr-B	1	29	
23a	PLATE 683X350X16THK	IS:2062 Gr-B	1	29	
22	PLATE 933X350X16THK	IS:2062 Gr-B	1	41	
BEAM TYPE - 4					
21	PLATE 447X218X10THK	IS:2062 Gr-B	1	7	Weight : 622
20	PLATE 218X122X10THK	IS:2062 Gr-B	5	10	
19	PLATE 516X218X10THK	IS:2062 Gr-B	1	9	
18	PLATE 480X218X10THK	IS:2062 Gr-B	1	8	
17	PLATE1065X218X10THK	IS:2062 Gr-B	1	18	
16	PLATE 1082X350X16THK	IS:2062 Gr-B	1	48	
15	PLATE 2728X447X16THK	IS:2062 Gr-B	1	149	
14	PLATE 3855X468X10THK	IS:2062 Gr-B	2	176	
13	PLATE 3810X447X16THK	IS:2062 Gr-B	1	197	
BEAM TYPE - 3					
12	PLATE 1610X468X10THK	IS:2062 Gr-B	2	108	Weight : 250
11	PLATE 350X350X16THK	IS:2062 Gr-B	1	16	
10	PLATE 1215X350X16THK	IS:2062 Gr-B	1	56	
9	PLATE 1565X350X16THK	IS:2062 Gr-B	1	71	
BEAM TYPE - 2					
8	PLATE 4150X468X10THK	IS:2062 Gr-B	2	251	Weight : 651
7	PLATE 350X300X10THK	IS:2062 Gr-B	2	15	
6	PLATE 350X250X10THK	IS:2062 Gr-B	3	19	
5	PLATE 1397X350X16THK	IS:2062 Gr-B	1	62	
4.1	PLATE 350X350X16THK	IS:2062 Gr-B	1	16	
4	PLATE 3800X350X16THK	IS:2062 Gr-B	1	168	
3	PLATE 2753X350X16THK	IS:2062 Gr-B	1	121	
BEAM TYPE - 1					
2	PLATE 6460X468X10THK	IS:2062 Gr-B	2	474	Weight : 1042
1	PLATE 6460X350X16THK	IS:2062 Gr-B	2	568	

DO NOT SCALE THE DRAWING
ASK IF IN DOUBT
UNLESS OTHERWISE SHOWN
ALL DIMENSIONS ARE IN MILLIMETERS
REMOVE SHARP EDGES & BURRS
CHAMFER 1 M.M. X 45°
MACHINING FINISH IN MICRONS :-
▽ 8 – 25 ▽▽ 1.6 – 8
▽▽▽ 0.025 – 1.6 ▽▽▽▽ < 0.025

DEVIATION FOR NON TOLERANCED DIMENSIONS (IS –2102)

DIAMETERS & LENGTHS UPTO & INCL.		LENGTH IN M.M. OF SHORTER SIDE OF ANGLE UPTO & INCL.	
6 –	+0.1	1– 6	± 1'–0d'
30 –	+0.2	6– 30	± 0'–3d'
120 –	+0.3	30–120	± 0'–2d'
315 –	+0.5	120–400	± 0'–1d'
1000 –	+0.8		
2000 –	+1.2		
4000 –	+2.0		
& ABOVE	+3.0		

SCEND & ASG

DESIGNED		6.11.15
DES.CHKD		
DRAWN	RAGHU	
DRG.CHKD		
APPROVED		
	SIGN	DATE

TITLE: DETAILS OF BEAM TYPE NO. 1, 2, 3, 4, & 5

SATISH DHAWAN SPACE CENTRE
SHAR CENTRAL DESIGNS
I.S.R.O SRIHARIKOTA

PROJECTION

SCALE 1:20

DRG. NO. 10-04-200-06-02-62/A1/R1

SHEET 2 OF 7

SCEND/X172/2015/RAGHU/OS

REF. DRG. NO. 10-04-200-06-02-62/A1/R1

COM. FILE NO. SCEND/X173/2015/RAGHU/OS

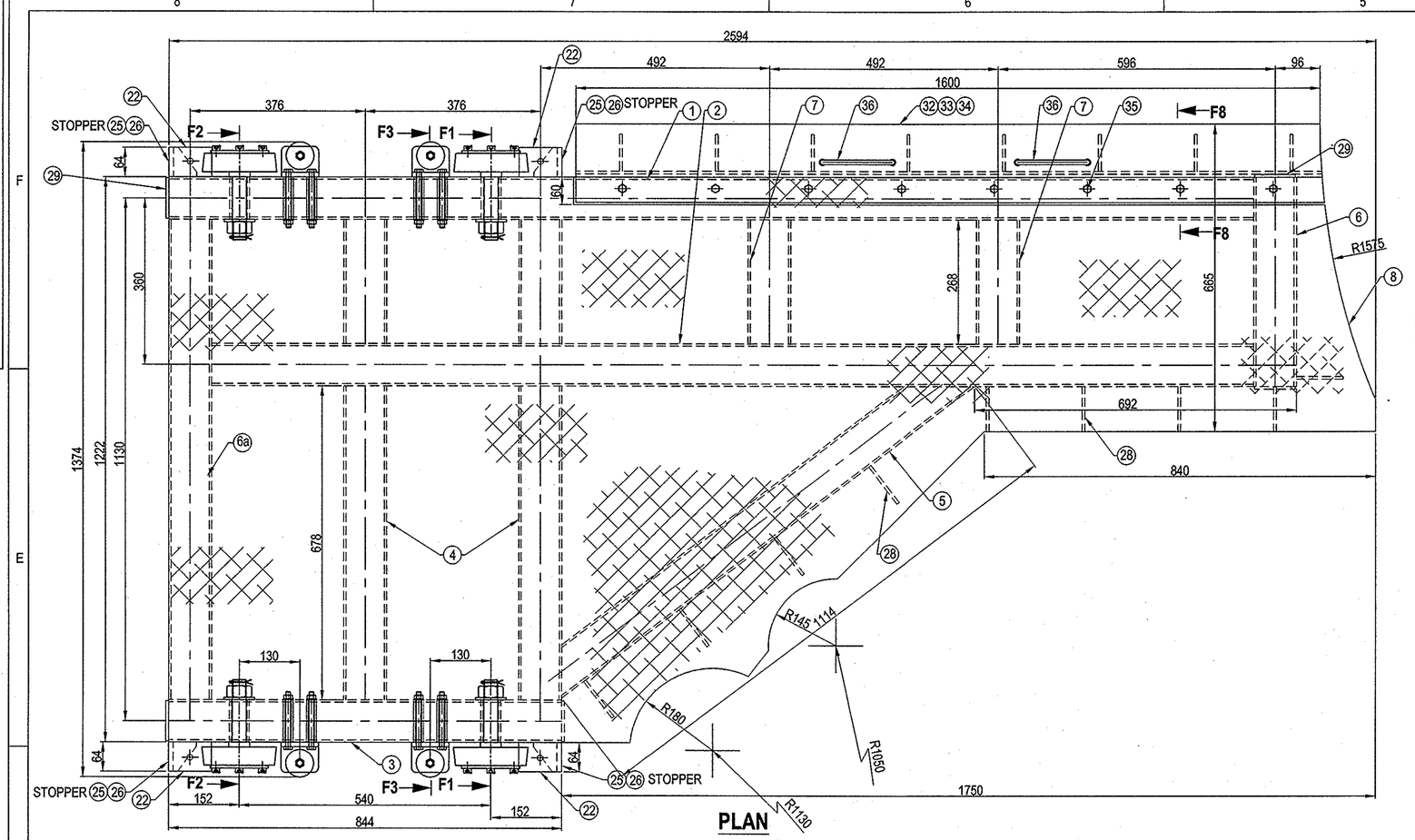

PLAN

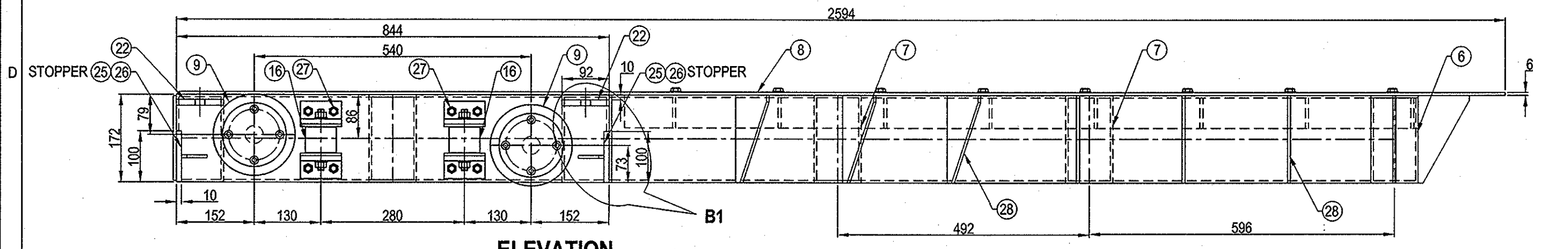

ELEVATION

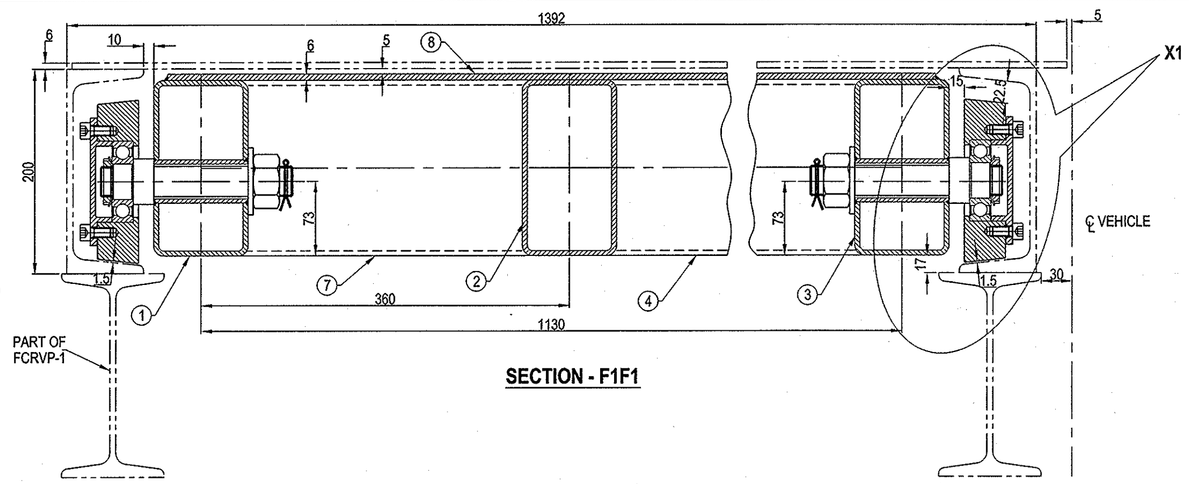

SECTION - F1F1

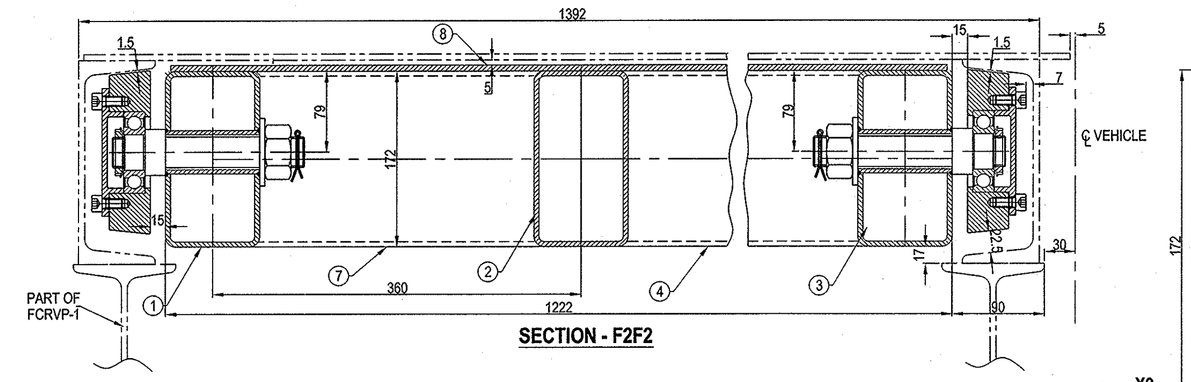

SECTION - F2F2

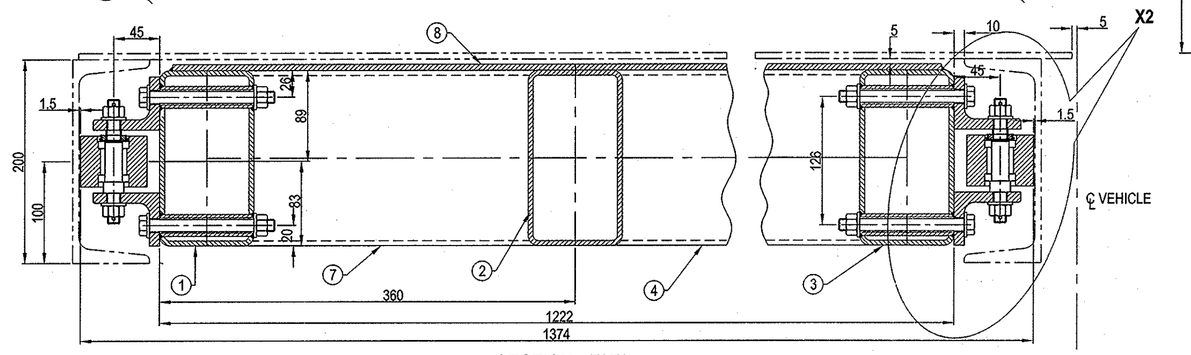

SECTION - F3F3

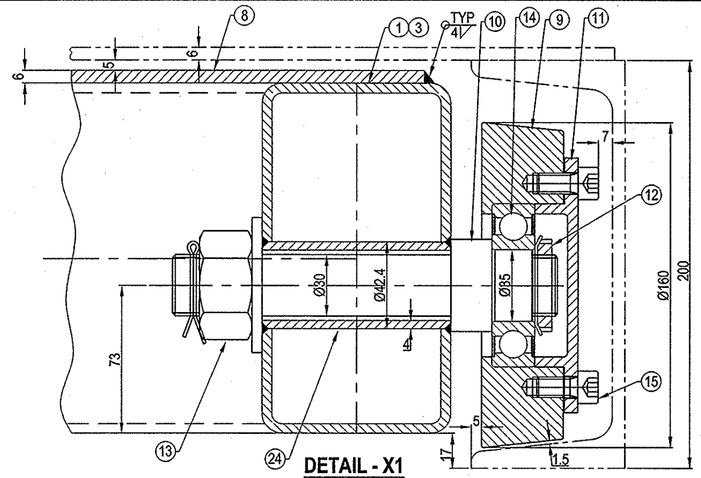

DETAIL - X1

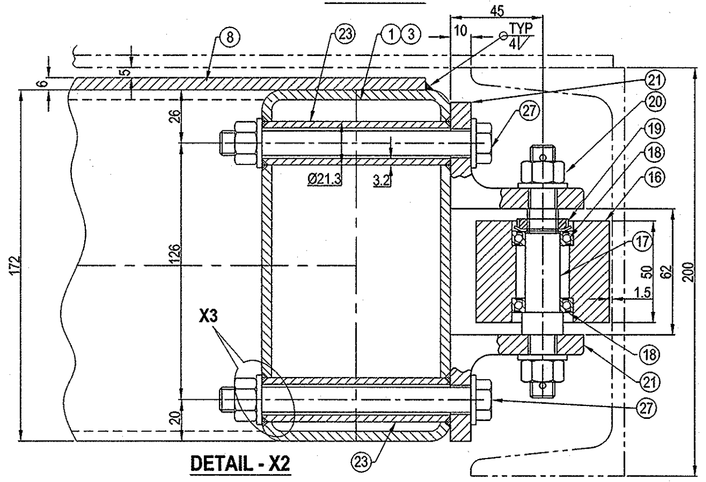

DETAIL - X2

	31	CHAIN	IS:2062 Gr-B	4	-	
	30	LOCKING PIN Ø40 - 90 Lg	IS:2062 Gr-B	4	2	
	29	COVER PLATE 166X86X6THK	IS:2062 Gr-B	5	3	
	28	STIFFENER 172X98X6THK	IS:2062 Gr-B	8	6	
	27	HEX BOLT M12 - 125 Lg, THREAD LENGTH -20mm WITH NUT & TWO WASHER	IS:1364	16		
STOPPER	26	STIFFENER 70X50X6THK	IS:2062 Gr-B	4		
	25	PLATE 100X74X10THK	IS:2062 Gr-B	4	3	
	24	PIPE 32NB(H) OD 42.4 X4THK - 92 Lg	IS:1161	4		
	23	PIPE 15NB(H) OD 21.3 X3.2THK - 92 Lg	IS:1161	16	3	
	22	PLATE 92X70X10THK	IS:2062 Gr-B	4	2	
	21	ISA 65X65X10THK - 80 Lg	IS:808	8	6	
	20	HEX NUT M12 WITH WASHER & Ø3 SPLIT PIN	IS:1364 IS: 549	8		
	19	LOCK NUT KM2- M15X1 - 5 WIDTH WITH WASHER -MB2	SKF	4		
	18	DEEP GROOVE BALL BEARING	SKF	8		Ref. Specifications
	17	SHAFT Ø20 - 124 Lg	En - 24	4	2	
	16	WHEEL Ø65 - 50 WIDTH	IS:2062 Gr-B	4	5	
	15	HEX SOCKET HEAD SCREW M10X1 -20 Lg	IS:2269	16		
	14	DEEP GROOVE BALL BEARING	SKF	4		Ref. Specifications
	13	HEX NUT M30 WITH WASHER & Ø6 SPLIT PIN	IS:1364 IS:549	4		
	12	LOCK NUT KM6 -M30X1.5 - 7 WIDTH FOR BEARING WITH WASHER - MB6	SKF	4		
	11	END COVER FOR BEARING	IS:2062 Gr-B	4	3	
	10	SHAFT Ø45 - 188 Lg	En - 24	4	6	
	9	WHEEL Ø160X40 WIDTH	IS:2062 Gr-B	4	19	
	8	CHEQ. PLATE 6 mm THK	IS:3502	1	104	
	7	RECTANGULAR HOLLOW SECTION 172X92X4.8THK - 268	IS:4923	4	20	TATA STRUCTURE
	6a	RECTANGULAR HOLLOW SECTION 172X92X4.8THK - 1038	IS:4923	1	19	TATA STRUCTURE
	6	RECTANGULAR HOLLOW SECTION 172X92X4.8THK - 452	IS:4923	1	8	TATA STRUCTURE
	5	RECTANGULAR HOLLOW SECTION 172X92X4.8THK - 1114	IS:4923	1	21	TATA STRUCTURE
	4	RECTANGULAR HOLLOW SECTION 172X92X4.8THK - 678	IS:4923	2	25	TATA STRUCTURE
	3	RECTANGULAR HOLLOW SECTION 172X92X4.8THK - 844	IS:4923	1	16	TATA STRUCTURE
	2	RECTANGULAR HOLLOW SECTION 172X92X4.8THK - 2240	IS:4923	1	42	TATA STRUCTURE
	1	RECTANGULAR HOLLOW SECTION 172X92X4.8THK - 2332	IS:4923	1	44	TATA STRUCTURE
	S.NO	DESCRIPTION	MATERIAL	QTY	W.T	REMARKS

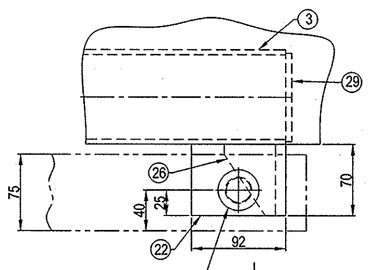

DETAIL - B1

(STOPPER & LOCKING DETAILS)

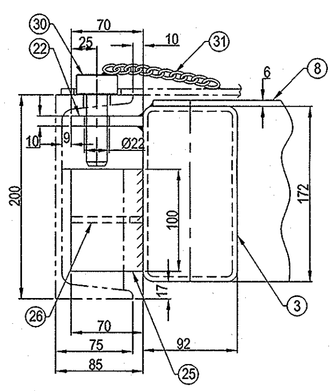

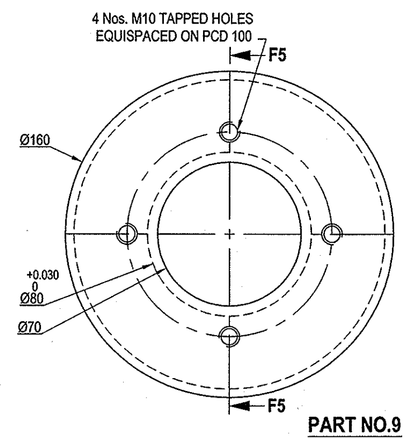

PART NO.9

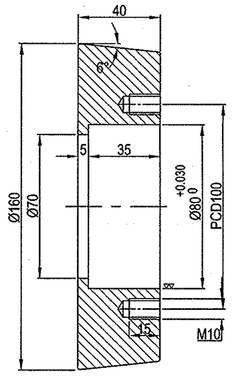

SECTION - F5F5

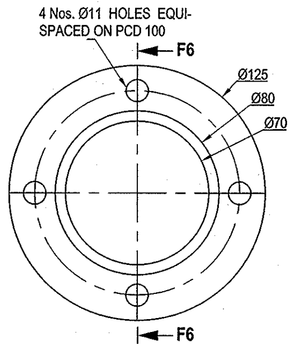

PART NO.11

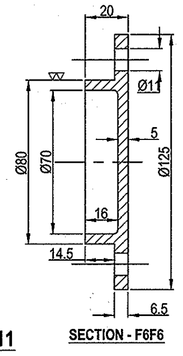

SECTION - F6F6

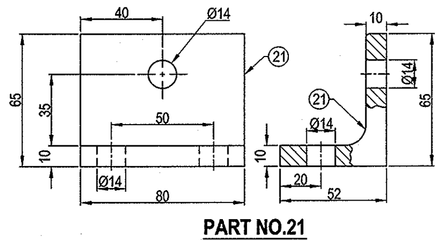

PART NO.21

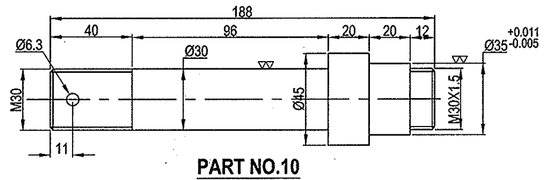

PART NO.10

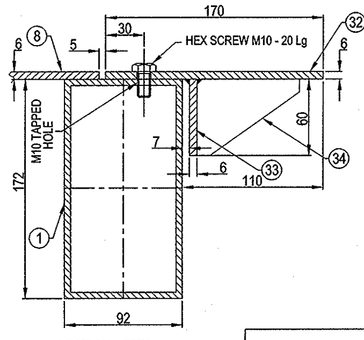

SECTION - F8F8

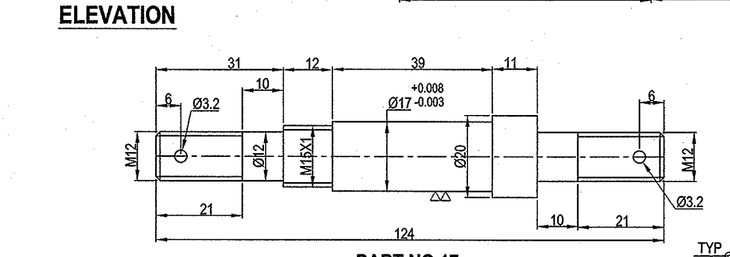

PART NO.17

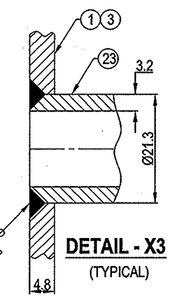

DETAIL - X3

(TYPICAL)

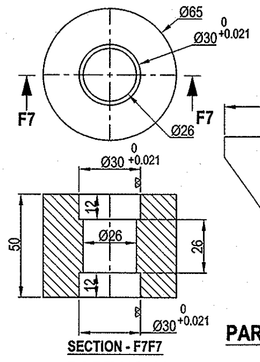

SECTION - F7F7

PART NO.16

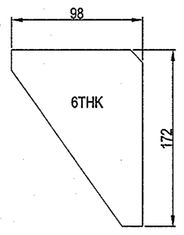

PART NO.28

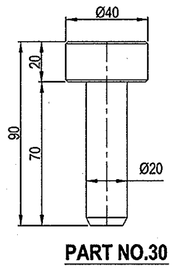

PART NO.30

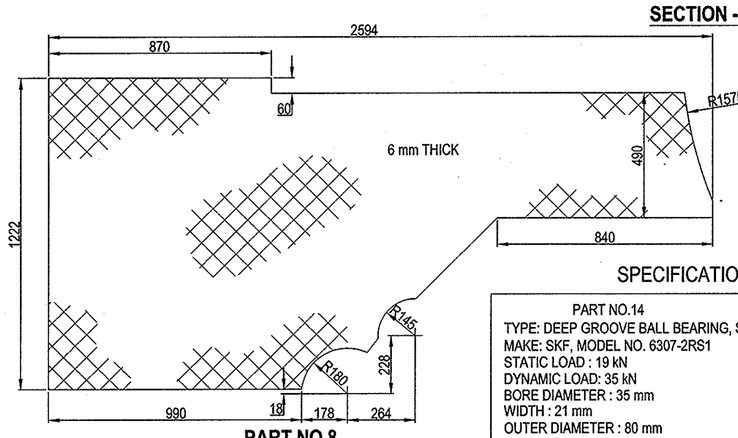

PART NO.8

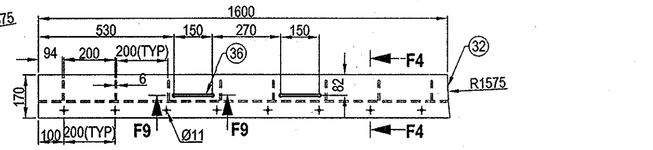

PART Nos.32 TO 34

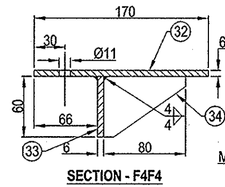

SECTION - F4F4

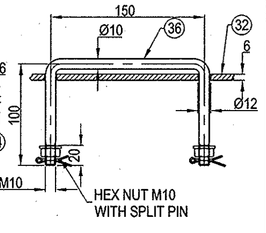

SECTION - F9F9

SPECIFICATIONS

PART NO.14
TYPE: DEEP GROOVE BALL BEARING, SINGLE ROW, SEALED
MAKE: SKF, MODEL NO. 6307-2RS1
STATIC LOAD : 19 kN
DYNAMIC LOAD: 35 kN
BORE DIAMETER : 35 mm
WIDTH : 21 mm
OUTER DIAMETER : 80 mm

PART NO.18
TYPE: DEEP GROOVE BALL BEARING, SINGLE ROW, SEALED
MAKE: SKF, MODEL NO. 61903-2RS1
STATIC LOAD : 2.58 kN
DYNAMIC LOAD : 4.62 kN
BORE DIAMETER : 17 mm
WIDTH : 7 mm
OUTER DIAMETER : 30 mm

STATUS	SIGN	DATE
DISCUSSION/REVIEW		
TENDER PURPOSE		
FABRICATION		6/11/15

NOTE:
1. ALL WELDS ARE OF 4 mm SIZE FILLET UNLESS OTHERWISE SPECIFIED
2. ALL WELD JOINTS SHALL BE DP TESTED FOR THE ROOT AND FINAL PASSES TO ENSURE WELD QUALITY.
3. CHECK THE STATUS OF THE DRAWING BEFORE STARTING THE FABRICATION.

TOTAL WEIGHT: 369 kg

36	HANDLE Ø10 ROD -350 Lg WITH TWO Nos. OF HEX NUT M10 & SPLIT PIN	IS:2062 Gr-B IS:1364,549	2	-	
35	HEX SCREW M10 - 20 Lg	IS:1364	8	-	
34	STIFFENER 80X60X6THK	IS:2062 Gr-B	8	2	
33	PLATE 1600X60X6THK	IS:2062 Gr-B	1	4	
32	CHEQ. PLATE 1600X170X6 THK	IS:3502	1	13	

DO NOT SCALE THE DRAWING
ASK IF IN DOUBT
UNLESS OTHERWISE SHOWN
ALL DIMENSIONS ARE IN MILLIMETERS
REMOVE SHARP EDGES & BURRS
CHAMFER 1 M.M. X 45°
MACHINING FINISH IN MICRONS :-
▽ 8 – 25 ▽▽ 1.6 – 8
▽▽▽ 0.025 – 1.6 ▽▽▽▽ < 0.025

DEVIATION FOR NON TOLERANCED DIMENSIONS (IS –2102)

DIAMETERS & LENGTHS	
UPTO & INCL. 6	+0.1
6 – 30	+0.2
30 – 120	+0.3
120 – 315	+0.5
315 – 1000	+0.8
1000 – 2000	+1.2
2000 – 4000	+2.0
4000 & ABOVE	+3.0

LENGTH IN M.M. OF SHORTER SIDE OF ANGLE UPTO & INCL.	
1– 6	± 1'–0δ
6– 30	± 0'–3δ
30–120	± 0'–2δ
120–400	± 0'–1δ

SCEND & ASG

		SIGN	DATE
DESIGNED			6.11.15
DES.CHKD			
DRAWN	RAGHU		
DRG.CHKD			
APPROVED			

TITLE

DETAILS OF SLIDING PLATFORM TYPE - 1

SATISH DHAWAN SPACE CENTRE
SHAR CENTRAL DESIGNS
I.S.R.O SRIHARIKOTA

PROJECTION

SCALE 1:10

DRG. NO. 10-04-200-06-02-62/A1/R1

SHEET 3 OF 7

SCEND/X173/2015/RAGHU/OS

REF. DRG. NO. 10-04-200-06-02-62/A1/R1

COM. FILE NO. SCEND/X174/2015/RAGHU/OS

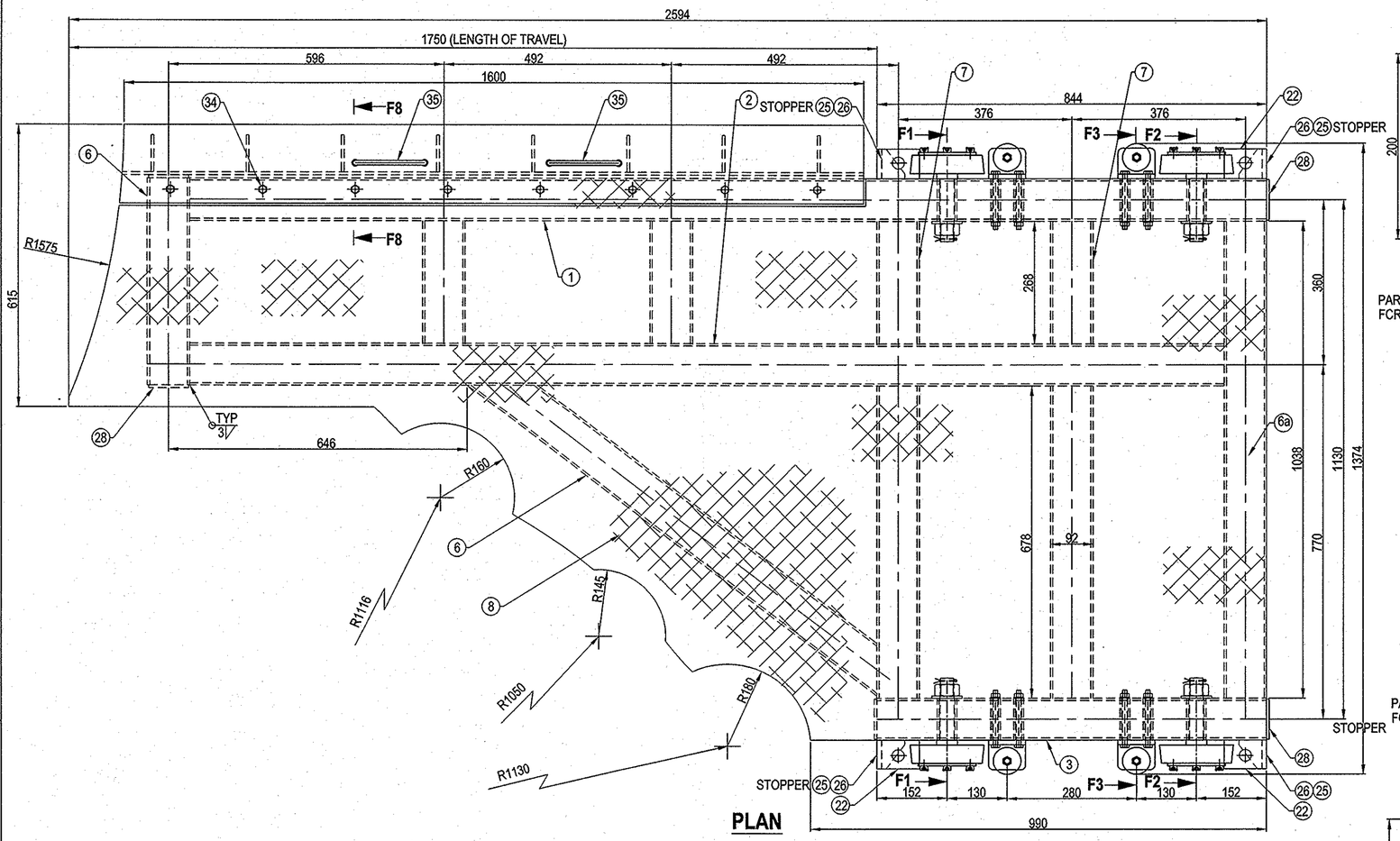

PLAN

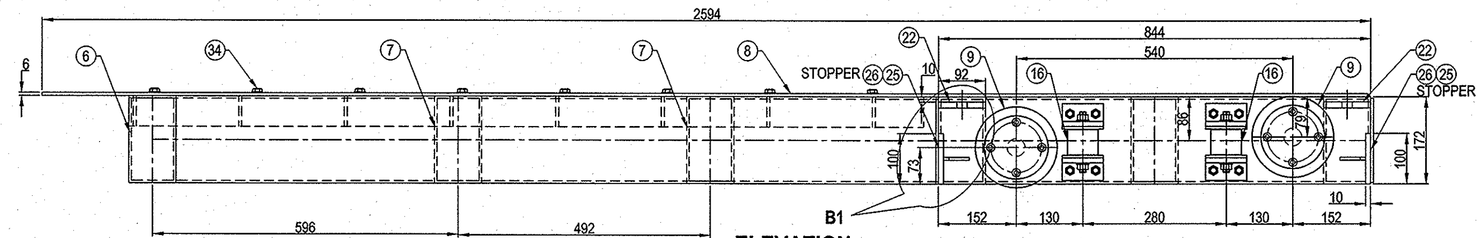

ELEVATION

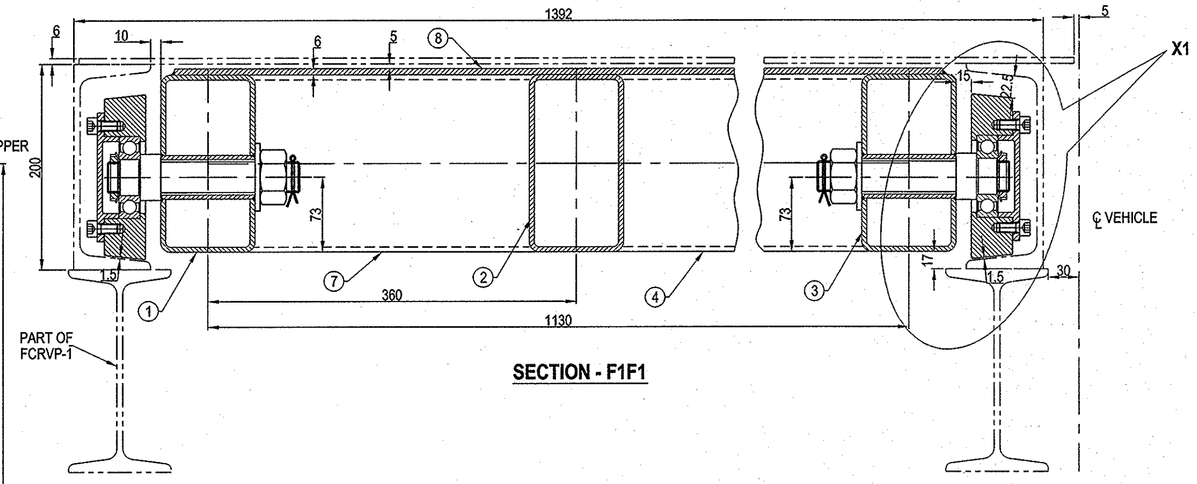

SECTION - F1F1

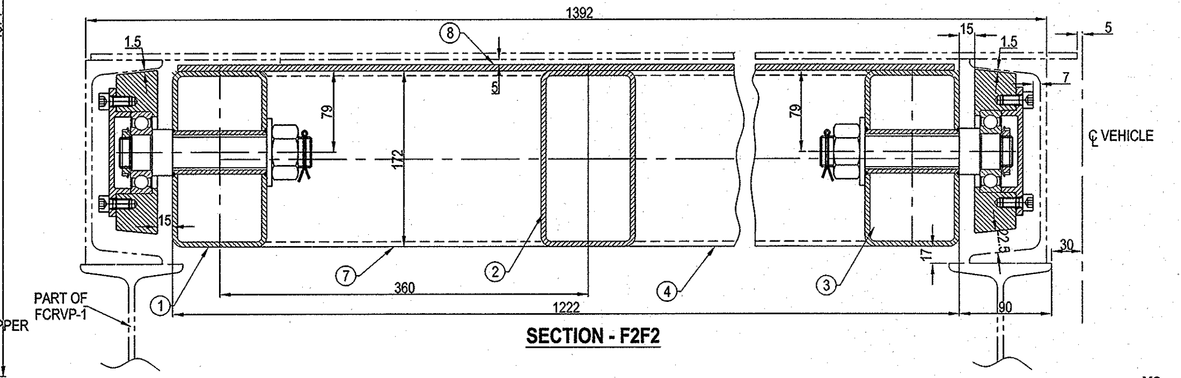

SECTION - F2F2

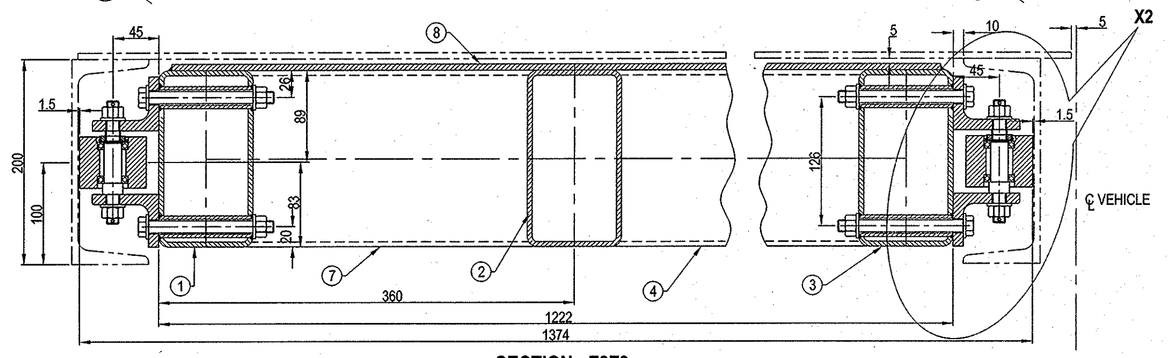

SECTION - F3F3

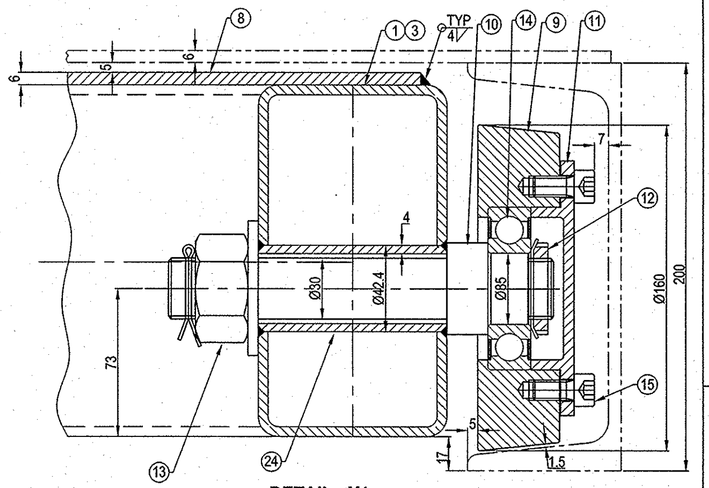

DETAIL - X1

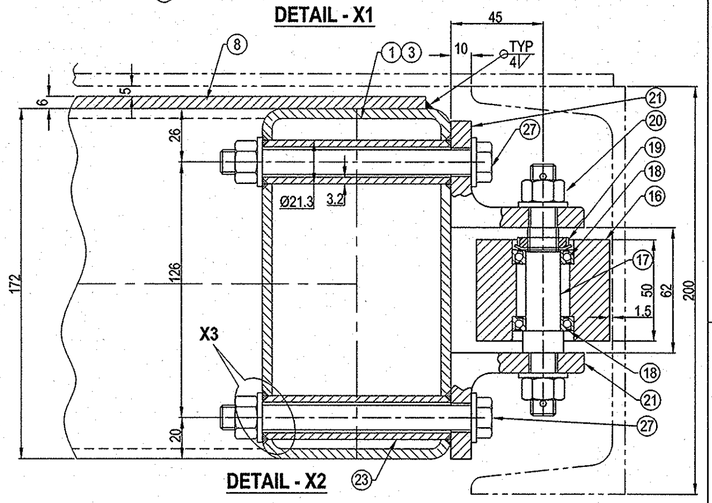

DETAIL - X2

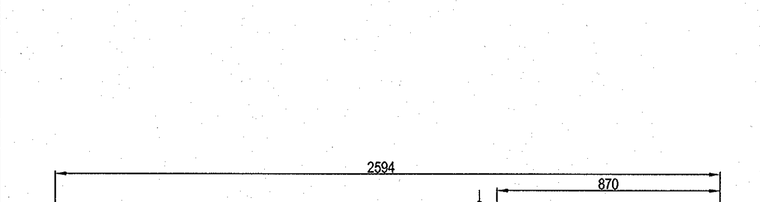

PART NO.8

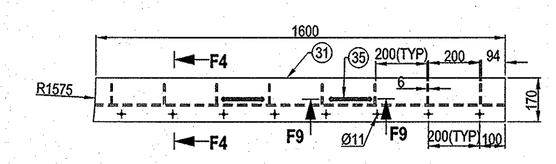

PART Nos.31 TO 33

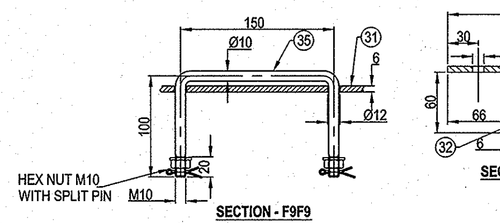

SECTION - F9F9

SECTION - F4F4

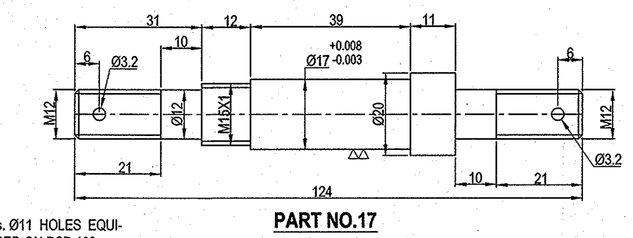

PART NO.17

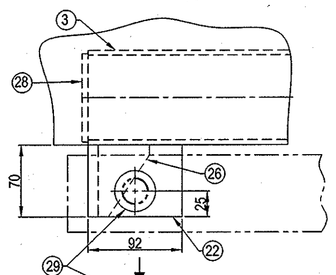

DETAIL - B1

(STOPPER & LOCKING DETAILS)

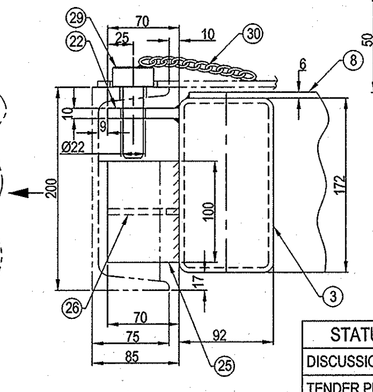

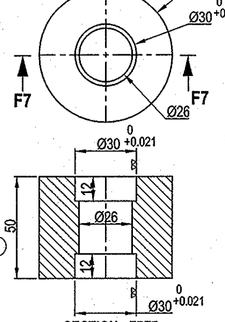

SECTION - F7F7

PART NO.16

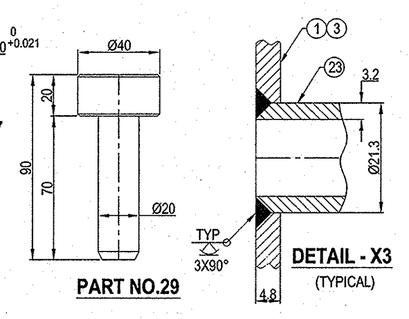

PART NO.29

DETAIL - X3

(TYPICAL)

SPECIFICATIONS

PART NO.14
TYPE: DEEP GROOVE BALL BEARING, SINGLE ROW, SEALED
MAKE: SKF, MODEL NO. 6307-2RS1
STATIC LOAD : 19 kN
DYNAMIC LOAD: 35 kN
BORE DIAMETER : 35 mm
WIDTH : 21 mm
OUTER DIAMETER : 80 mm

PART NO.18
TYPE: DEEP GROOVE BALL BEARING, SINGLE ROW, SEALED
MAKE: SKF, MODEL NO. 61903-2RS1
STATIC LOAD : 2.66 kN
DYNAMIC LOAD : 4.62 kN
BORE DIAMETER : 17 mm
WIDTH : 7 mm
OUTER DIAMETER : 30 mm

STATUS	SIGN	DATE
DISCUSSION/REVIEW		
TENDER PURPOSE		
FABRICATION		6.11.15

NOTE:
1. ALL WELDS ARE OF 4 mm SIZE FILLET UNLESS OTHERWISE SPECIFIED
2. ALL WELD JOINTS SHALL BE DP TESTED FOR THE ROOT AND FINAL PASSES TO ENSURE WELD QUALITY.
3. CHECK THE STATUS OF THE DRAWING BEFORE STARTING THE FABRICATION.

TOTAL WEIGHT: 358 kg

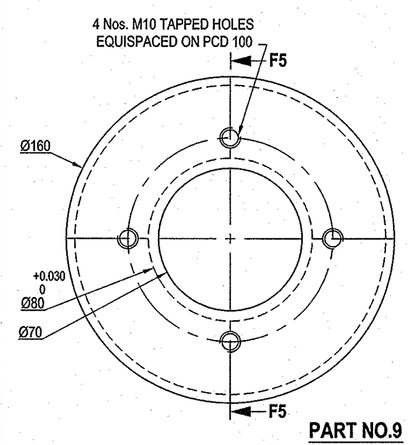

PART NO.9

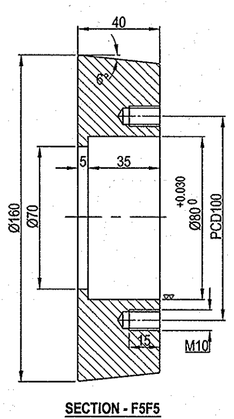

SECTION - F5F5

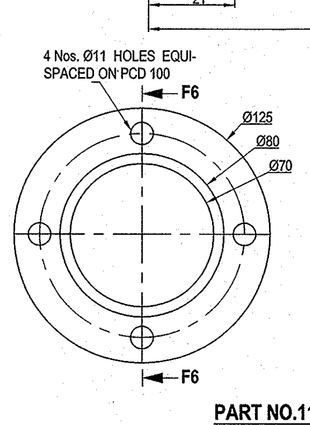

PART NO.11

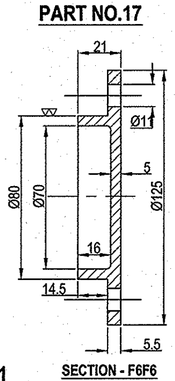

SECTION - F6F6

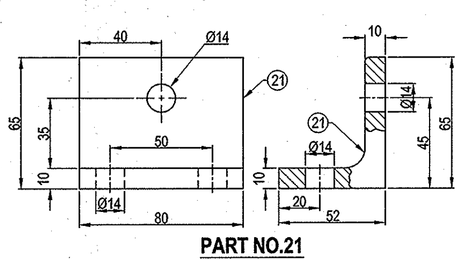

PART NO.21

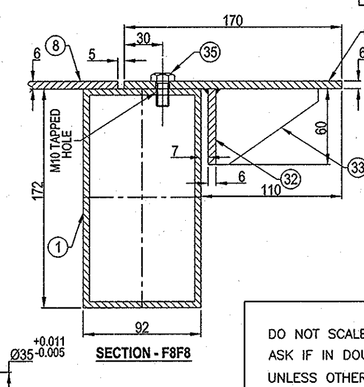

SECTION - F8F8

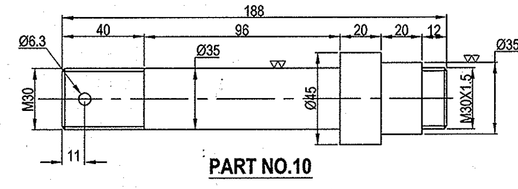

PART NO.10

S.NO	DESCRIPTION	MATERIAL	QTY	W.T	REMARKS
30	CHAIN	IS:2062 Gr-B	4	-	
29	LOCKING PIN Ø40 - 90 Lg	IS:2062 Gr-B	4	2	
28	COVER PLATE 166X86X6THK	IS:2062 Gr-B	5	3	
27	HEX BOLT M12 - 125 Lg, THREAD LENGTH -20mm WITH NUT & TWO WASHER	IS:1364	16		
26	STIFFENER 70X50X6THK	IS:2062 Gr-B	4		STOPPER
25	PLATE 100X70X10THK	IS:2062 Gr-B	4	3	STOPPER
24	PIPE 32NB(H) OD 42.4 X4THK - 92 Lg	IS:1161	4		
23	PIPE 15NB(H) OD 21.3 X3.2THK - 92 Lg	IS:1161	16	3	
22	PLATE 92X70X10THK	IS:2062 Gr-B	4	2	
21	ISA 65X65X10THK - 80 Lg	IS:808	8	6	
20	HEX NUT M12 WITH WASHER & Ø3 SPLIT PIN	IS:1364 IS:549	8		
19	LOCK NUT KM2- M15X1-5WIDTH WITH WASHER MB-2	SKF	4		
18	DEEP GROOVE BALL BEARING	SKF	8		Ref. Specifications
17	SHAFT Ø20 - 124 Lg	En - 24	4	2	
16	WHEEL Ø65 - 50 WIDTH	IS:2062 Gr-B	4	5	
15	HEX SOCKET HEAD SCREW M10X1 -20 Lg	IS:2269	16		
14	DEEP GROOVE BALL BEARING	SKF	4		Ref. Specifications
13	HEX NUT M30 WITH WASHER & Ø6 SPLIT PIN	IS:1364 IS:549	4		
12	LOCK NUT KM6 -M30X1.5 - 7 WIDTH WITH WASHER - MB6	SKF	4		
11	END COVER FOR BEARING	IS:2062 Gr-B	4	3	
10	SHAFT Ø45 - 188 Lg	En - 24	4	6	
9	WHEEL Ø160X40 WIDTH	IS:2062 Gr-B	4	19	
8	CHEQ. PLATE 6 mm THK	IS:3502	1	102	
7	RECTANGULAR HOLLOW SECTION 172X92X4.8THK - 268	IS:4923	4	20	TATA STRUCTURE
6a	RECTANGULAR HOLLOW SECTION 172X92X4.8THK - 1038	IS:4923	1	19	TATA STRUCTURE
6	RECTANGULAR HOLLOW SECTION 172X92X4.8THK - 452	IS:4923	1	8	TATA STRUCTURE
5	RECTANGULAR HOLLOW SECTION 172X92X4.8THK - 1114	IS:4923	1	21	TATA STRUCTURE
4	RECTANGULAR HOLLOW SECTION 172X92X4.8THK - 678	IS:4923	2	25	TATA STRUCTURE
3	RECTANGULAR HOLLOW SECTION 172X92X4.8THK - 844	IS:4923	1	16	TATA STRUCTURE
2	RECTANGULAR HOLLOW SECTION 172X92X4.8THK - 2240	IS:4923	1	42	TATA STRUCTURE
1	RECTANGULAR HOLLOW SECTION 172X92X4.8THK - 2332	IS:4923	1	44	TATA STRUCTURE
35	HANDLE Ø10 ROD -350 Lg WITH TWO Nos. OF HEX NUT M10 & SPLIT PIN	IS:2062 Gr-B IS:1364,549	2	-	
34	HEX SCREW M10 - 20 Lg	IS:1364	8	-	
33	STIFFENER 80X60X6THK	IS:2062 Gr-B	8	2	
32	PLATE 1600X60X6THK	IS:2062 Gr-B	1	4	
31	CHEQ. PLATE 1600X170X6 THK	IS:3502	1	13	

DO NOT SCALE THE DRAWING
ASK IF IN DOUBT
UNLESS OTHERWISE SHOWN
ALL DIMENSIONS ARE IN MILLIMETERS
REMOVE SHARP EDGES & BURRS
CHAMFER 1 M.M. X 45°
MACHINING FINISH IN MICRONS :–
▽ 8 – 25 ▽▽ 1.6 – 8
▽▽▽ 0.025 – 1.6 ▽▽▽▽ < 0.025

DEVIATION FOR NON TOLERANCED DIMENSIONS (IS –2102)

DIAMETERS & LENGTHS	
UPTO & INCL. 6	+0.1
6 – 30	+0.2
30 – 120	+0.3
120 – 315	+0.5
315 – 1000	+0.8
1000 – 2000	+1.2
2000 – 4000	+2.0
4000 & ABOVE	+3.0

LENGTH IN M.M. OF SHORTER SIDE OF ANGLE UPTO & INCL.	
1– 6	± 1'–00'
6– 30	± 0'–30'
30–120	± 0'–20'
120–400	± 0'–10'

SCEND & ASG

	SIGN	DATE
DESIGNED		6.11.15
DES.CHKD		
DRAWN	RAGHU	
DRG.CHKD		
APPROVED		

TITLE: DETAILS OF SLIDING PLATFORM TYPE - 2

SATISH DHAWAN SPACE CENTRE
SHAR CENTRAL DESIGNS
I.S.R.O SRIHARIKOTA

PROJECTION

SCALE 1:10

DRG. NO. 10-04-200-06-02-62/A1/R1

SHEET 4 OF 7

SCEND/X174/2015/RAGHU/OS

REF. DRG. NO. 10-04-200-06-02-62/A1/R1
COM. FILE NO. SCEND/X175/2015/RAGHU/OS/R1

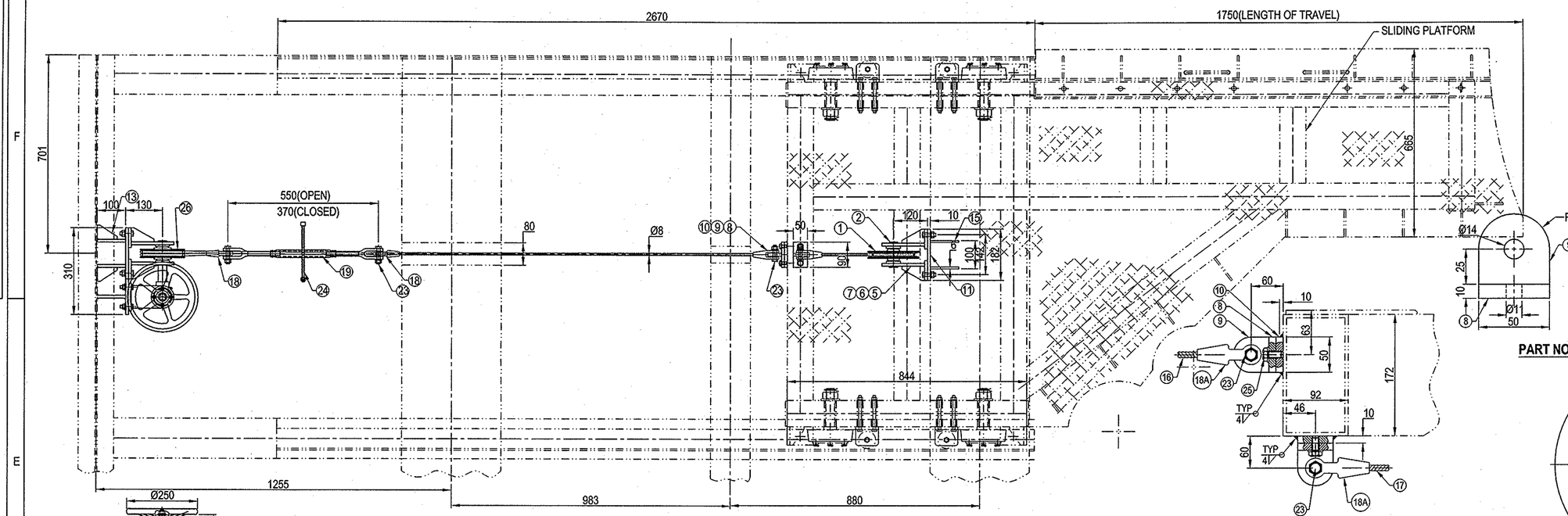

PLAN

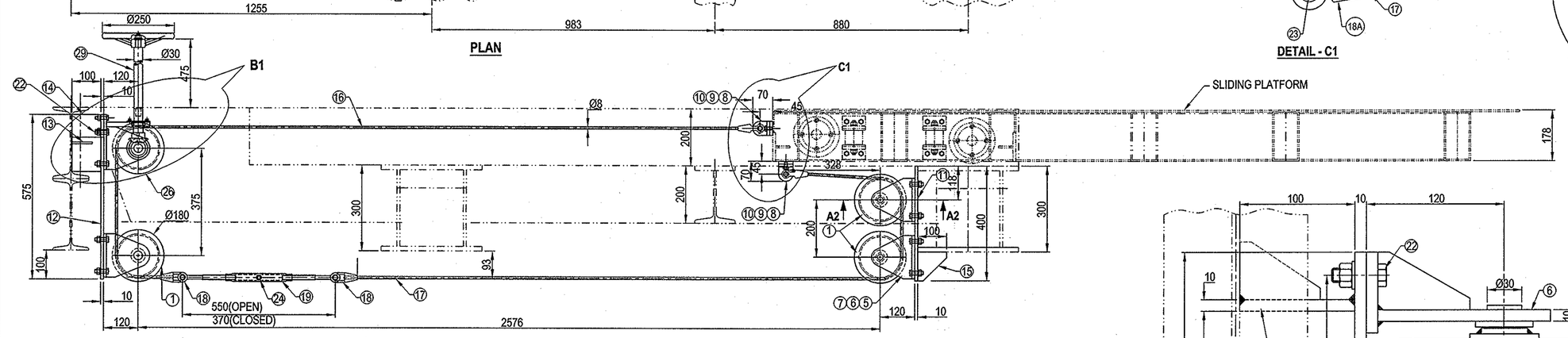

ELEVATION
(SLIDING PLATFORM IS OPEN CONDITION)

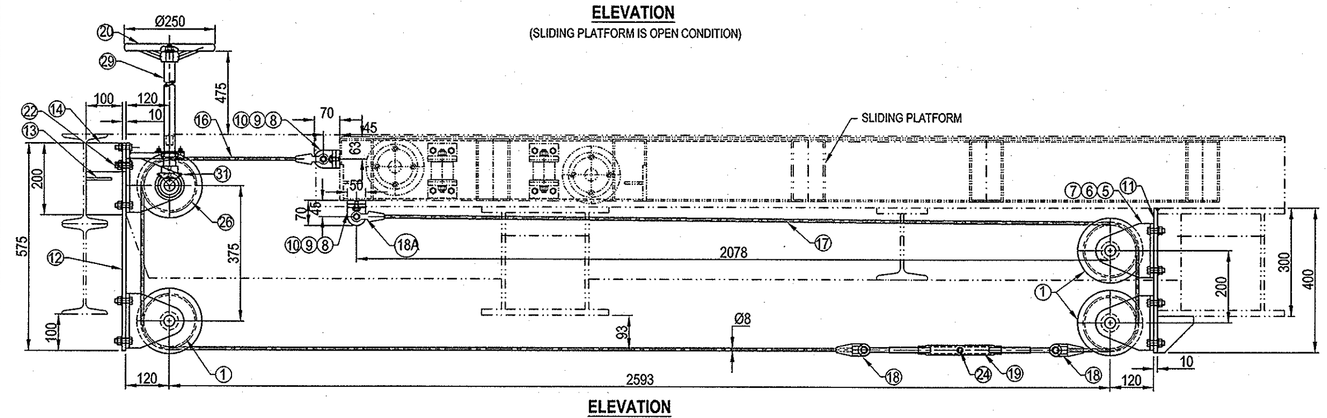

ELEVATION
(SLIDING PLATFORM IS CLOSED CONDITION)

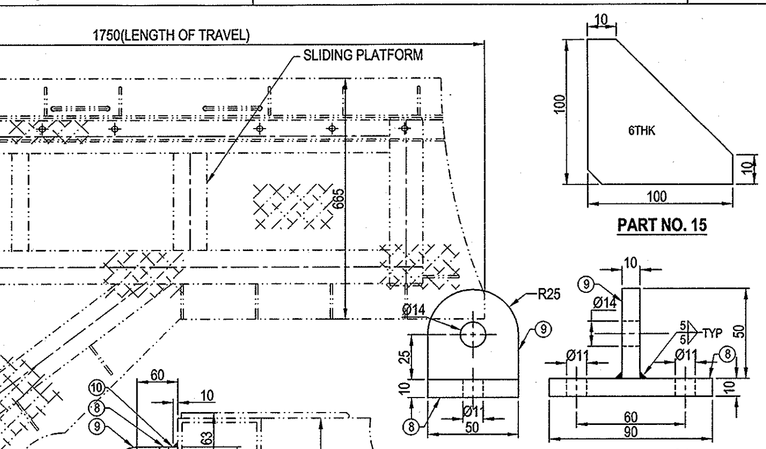

DETAIL - C1

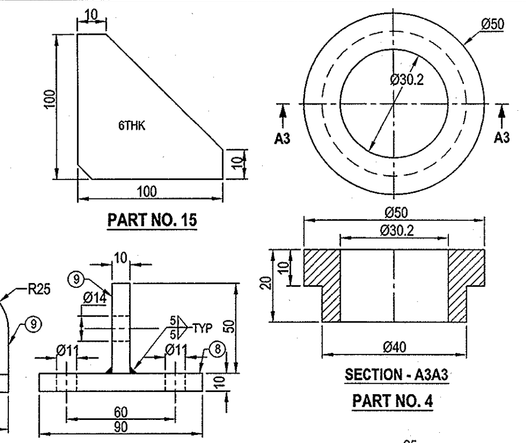

PART NO. 15

PART NO. 8 & 9

SECTION - A3A3

PART NO. 4

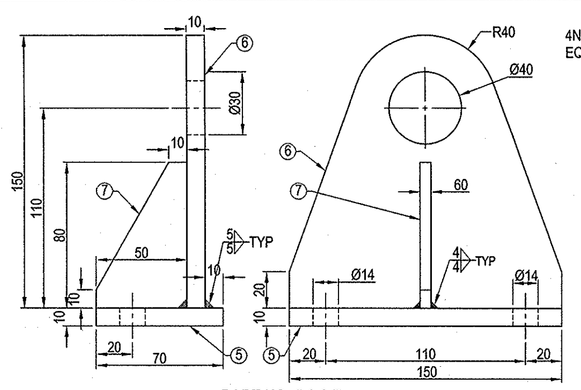

PART NO. 5,6 & 7

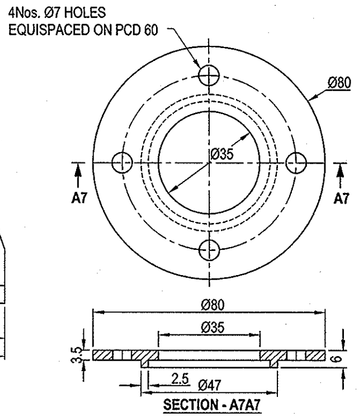

SECTION - A7A7

PART NO. 32

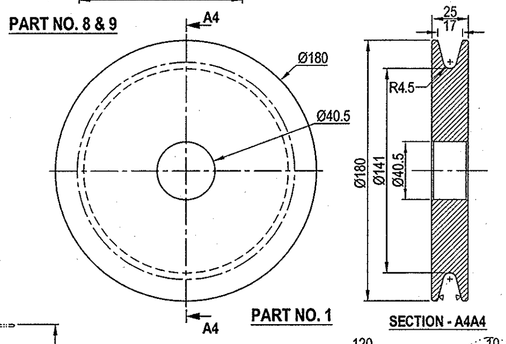

PART NO. 1

SECTION - A4A4

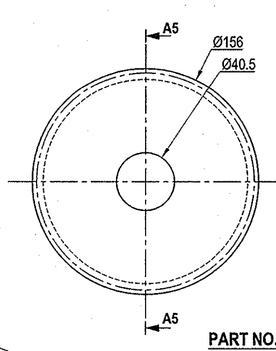

PART NO. 26

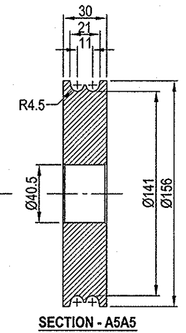

SECTION - A5A5

NOTE:
1. ALL WELDS ARE OF 5 mm SIZE FILLET UNLESS OTHERWISE SPECIFIED.
2. ALL WELD JOINTS SHALL BE DP TESTED FOR THE ROOT AND FINAL PASSES TO ENSURE WELD QUALITY
3. PART Nos. 16 & 17 ARE WIRE ROPES OF 8Ø CONFIRMING TO 1570 GRADE WITH THE CONSTRUCTION OF 6X7(6-1) CWS CONFIRMING TO IS:2266 SHALL BE PRE-STRETCHED AND GALVANIZED
4. CHECK THE STATUS OF THE DRAWING BEFORE STARTING THE FABRICATION

STATUS	SIGN	DATE
DISCUSSION/REVIEW		
TENDER PURPOSE		
FABRICATION		

TOTAL WEIGHT: 72 kg

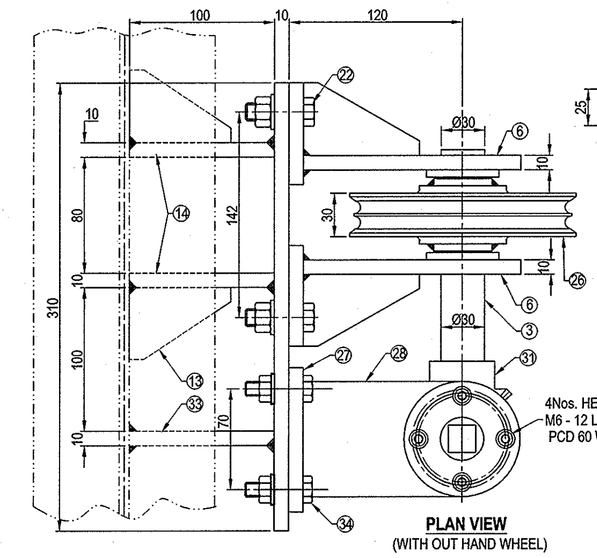

PLAN VIEW
(WITH OUT HAND WHEEL)

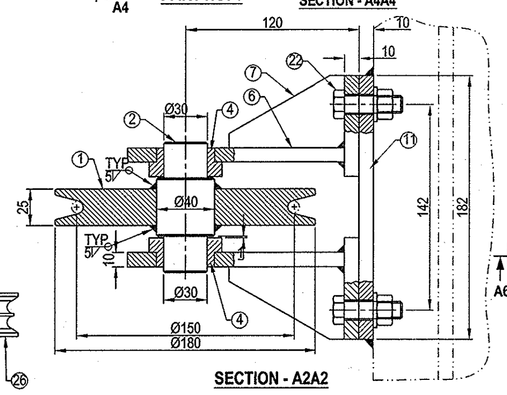

SECTION - A2A2

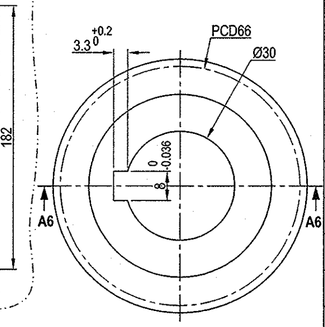

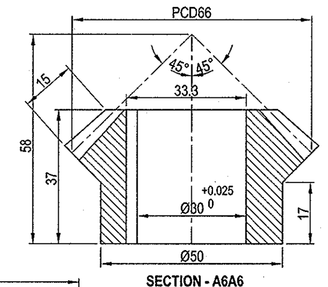

SECTION - A6A6

PART NO. 31

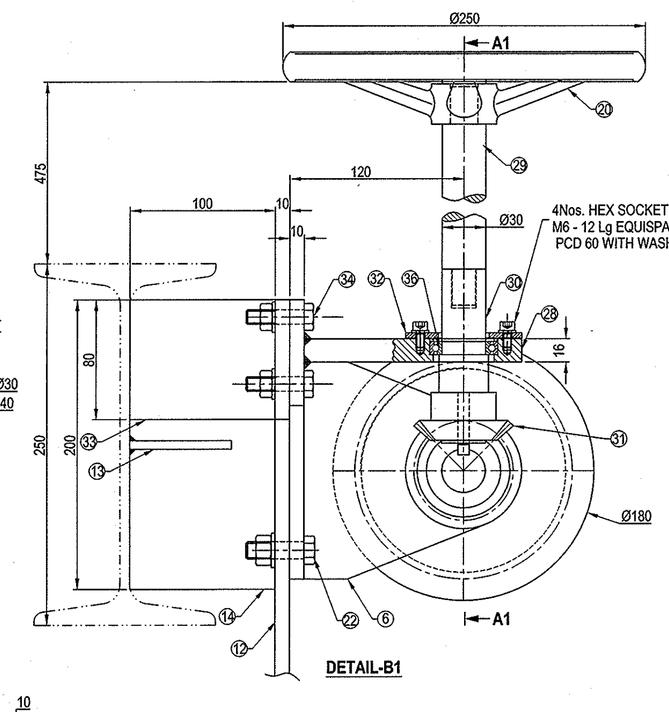

DETAIL-B1

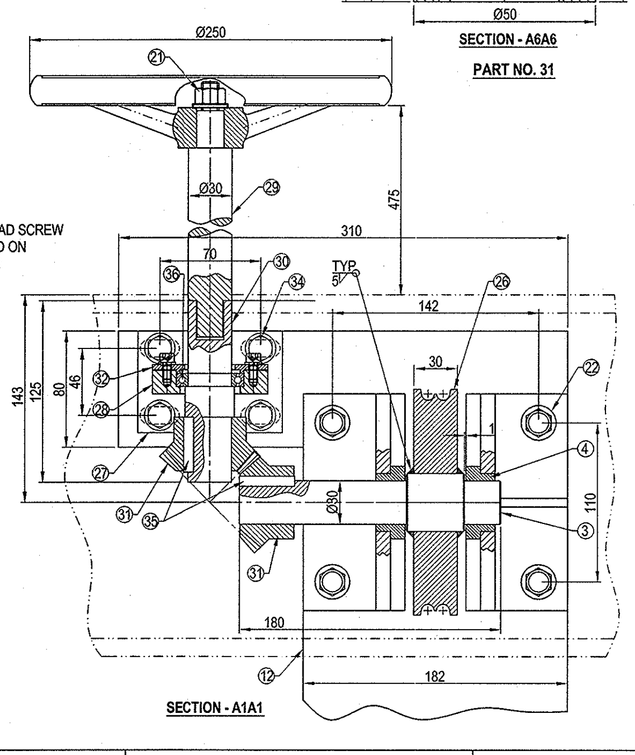

SECTION - A1A1

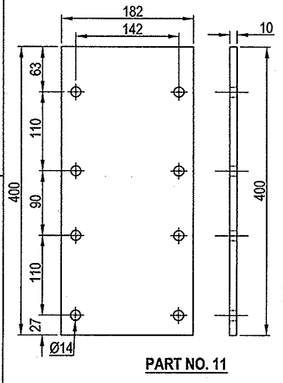

PART NO. 11

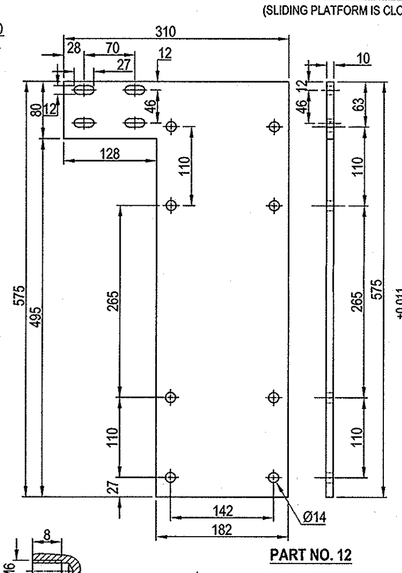

PART NO. 12

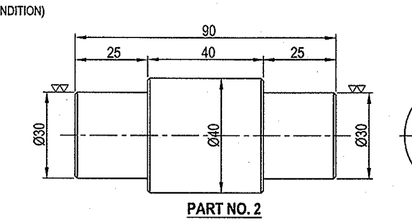

PART NO. 2

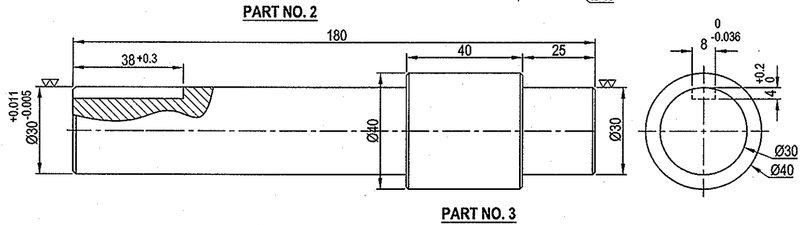

PART NO. 3

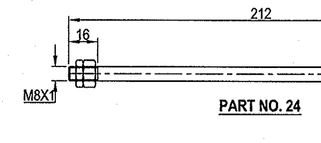

PART NO. 24

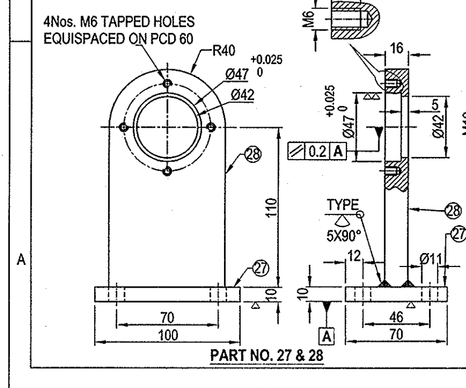

PART NO. 27 & 28

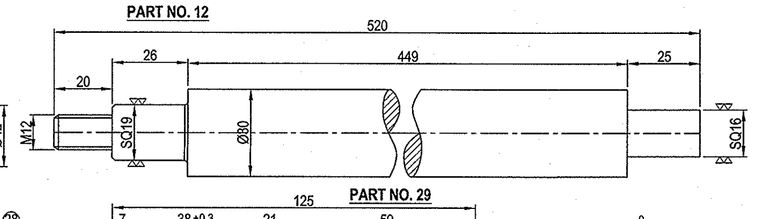

PART NO. 29

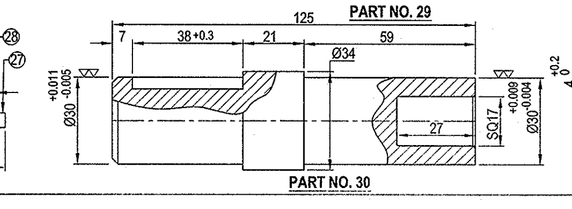

PART NO. 30

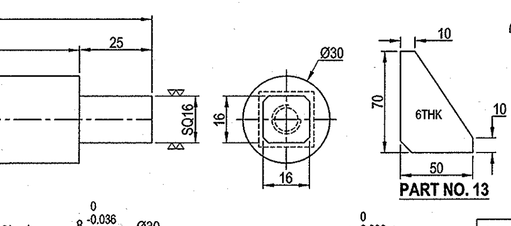

PART NO. 13

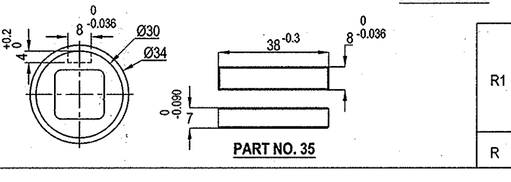

PART NO. 35

S.NO	DESCRIPTION	MATERIAL	QTY	W.T	REMARKS
36	DEEP GROOVE BALL BEARING BORE-30, OD-47, 9-WIDTH	SKF	1	-	SKF Ref. NO 61906 - 2RS1
35	PARALLEL KEY B 8X7X38	IS:2048	2	-	
34	HEX BOLT M10 - 40Lg THREAD LENGTH 20 mm WITH NUT & WASHER	IS:1364	4	-	
33	PLATE 100X80X10THK	IS:2062 Gr-B	1	1	
32	END COVER Ø80X6THK	IS:2062 Gr-B	1	-	
31	BEVEL GEAR PCD - 66, MODULE- 3 NO. OF TEETH - 22	45C8	2	1	
30	SHAFT Ø34 - 125 Lg	IS:2062 Gr-B	1	1	
29	SHAFT Ø30 - 520 Lg	IS:2062 Gr-B	1	3	
28	PLATE 150X80X16THK	IS:2062 Gr-B	1	2	
27	PLATE 100X70X10THK	IS:2062 Gr-B	1		
26	DOUBLE GROOVED SHEAVE Ø156 X 30	IS:2062 Gr-B	1	4	
25	HEX SCREW M10 - 20 Lg WITH WASHER	IS:1364	4		
24	HANDLE ROD Ø8 - 200 Lg WITH HEX NUT M8X1 AND LOCK NUT	IS:2062 IS:1364	1		
23	HEX BOLT M12 - 55Lg, THREAD LENGTH 18 mm WITH NUT AND WASHER	IS:1364	4		
22	HEX BOLT M12 - 40Lg, THREAD LENGTH 18 mm WITH NUT AND WASHER	IS:1364	16		
21	HEX NUT M12 WITH WASHER	IS:1364	1		
20	HAND WHEEL B8X250X19-CI	IS:3048	1		
19	RIGGING SCREW M16, BOTH END SCREWED FORK	IS:3121	1		
18A	OPEN TYPE DROP FORGED SOCKET SOCKET CG 8	IS:2485	2		
18	CLOSED TYPE DROP FORGED SOCKET SOCKET - CG 8	IS:2485	2		
17	WIRE ROPE Ø8 (6X7) CWS - 2700 Lg	IS:2266	1		Ref. NOTE - 3
16	WIRE ROPE Ø8 (6X7) CWS - 3950 Lg	IS:2266	1		Ref.NOTE - 3
15	STIFFENER 100X100X6THK	IS:2062 Gr-B	2	1	
14	PLATE 200X100X10THK	IS:2062 Gr-B	2	3	
13	STIFFENER 60X50X6THK	IS:2062 Gr-B	2		
12	PLATE 575X310X10THK	IS:2062 Gr-B	1	9	
11	PLATE 400X182X10THK	IS:2062 Gr-B	1	6	
10	PLATE 90X50X10THK	IS:2062 Gr-B	2	1	
9	PLATE 50X50X10THK	IS:2062 Gr-B	2		
8	PLATE 90X50X10THK	IS:2062 Gr-B	2	1	
7	STIFFENER 80X50X6THK	IS:2062 Gr-B	6	2	
6	PLATE 150X150X10THK	IS:2062 Gr-B	6	14	
5	PLATE 150X70X10THK	IS:2062 Gr-B	6	6	
4	COLLARED BUSH	GUN METAL	8		
3	SHAFT TYPE - 2, DIA 40 - 180 Lg	IS:2062 Gr-B	1	2	
2	SHAFT TYPE - 1 DIA 40 - 90 Lg	IS:2062 Gr-B	3	2	
1	SHEAVE Ø180X25 WIDTH	IS:2062 Gr-B	3	12	

R	REVISIONS	ZONE	SIGN & DATE
R1	PART NOS 3 & 12 IS MODIFIED	B6	
	DETAIL - B IS ADDED	B4	
	PART NOS. 27 TO 36 IS ADDED	D8, B4	

DO NOT SCALE THE DRAWING
ASK IF IN DOUBT
UNLESS OTHERWISE SHOWN
ALL DIMENSIONS ARE IN MILLIMETERS
REMOVE SHARP EDGES & BURRS
CHAMFER 1 M.M. X 45°
MACHINING FINISH IN MICRONS :-
▽ 8 – 25 ▽▽ 1.6 – 8
▽▽▽ 0.025 – 1.6 ▽▽▽▽ < 0.025

DEVIATION FOR NON TOLERANCED DIMENSIONS (IS –2102)

DIAMETERS & LENGTHS	
UPTO & INCL. 6	+0.1
6 – 30	+0.2
30 – 120	+0.3
120 – 315	+0.5
315 – 1000	+0.8
1000 – 2000	+1.2
2000 – 4000	+2.0
4000 & ABOVE	+3.0

LENGTH IN M.M. OF SHORTER SIDE OF ANGLE UPTO & INCL.	
1– 6	± 1'–0d
6– 30	± 0'–30'
30–120	± 0'–20'
120–400	± 0'–10'

SCEND & ASG

DESIGNED		6.11.15
DES.CHKD		
DRAWN	RAGHU	
DRG.CHKD		
APPROVED		
	SIGN	DATE

TITLE: PART DETAILS OF SLIDING MECHANISM

SATISH DHAWAN SPACE CENTRE
SHAR CENTRAL DESIGNS
I.S.R.O SRIHARIKOTA

PROJECTION

SCALE 1:10 | DRG. NO. 10-04-200-06-02-62/A1/R1 | SHEET 5 OF 7

SCEND/X175/2015/RAGHU/OS/R1

REF. DRG. NO. 10-04-200-06-02-62/A1/R1

COM. FILE NO. SCEND/X176/2015/RAGHU/OS

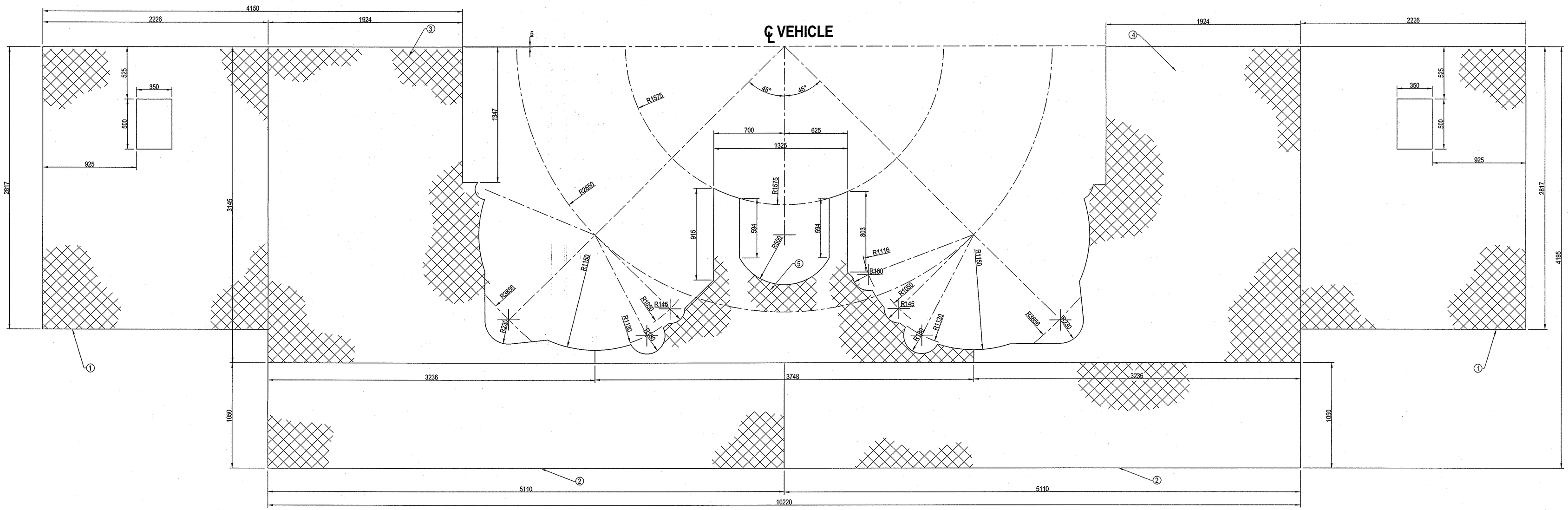

STATUS	SIGN	DATE
DISCUSSION/REVIEW		
TENDER PURPOSE		
FABRICATION		6/11/15

NOTE:
1. THE CHEQUERED PLATE SHALL BE WELDED TO THE TOP OF THE PLATFORM WITH 4 mm SIZE FILLET OF WELD (INTERMITTENT FILLET WELD OF 50(100) TYPE)
2. CHECK THE STATUS OF THE DRAWING BEFORE STARTING THE FABRICATION.

TOTAL WEIGH: 1827 kg

S.NO	DESCRIPTION	MATERIAL	QTY	W.T	REMARKS
5	CHEQ. PLATE 3748X1739X6THK	IS:3502	1	215	
4	CHEQ. PLATE 3120X3236X6THK	IS:3502	1	264	
3	CHEQ. PLATE 3145X3236X6THK	IS:3502	1	270	
2	CHEQ. PLATE 5109X1050X6THK	IS:3502	2	505	
1	CHEQ. PLATE 2817X2226X6THK	IS:3502	2	573	

DO NOT SCALE THE DRAWING
ASK IF IN DOUBT
UNLESS OTHERWISE SHOWN
ALL DIMENSIONS ARE IN MILLIMETERS
REMOVE SHARP EDGES & BURRS
CHAMFER 1 M.M. X 45°
MACHINING FINISH IN MICRONS :-
▽ 8 – 25 ▽▽ 1.6 – 8
▽▽▽ 0.025 – 1.6 ▽▽▽▽ < 0.025

DEVIATION FOR NON TOLERANCED DIMENSIONS (IS –2102)

DIAMETERS & LENGTHS UPTO & INCL.	
6 – 30	+0.2
30 – 120	+0.3
120 – 315	+0.5
315 – 1000	+0.8
1000 – 2000	+1.2
2000 – 4000	+2.0
4000 & ABOVE	+3.0

LENGTH IN M.M. OF SHORTER SIDE OF ANGLE UPTO & INCL.
1– 6 ± 1°–00'
6– 30 ± 0°–30'
30–120 ± 0°–20'
120–400 ± 0°–10'

SCEND & ASG

DESIGNED		6.11.15
DES.CHKD		
DRAWN	RAGHU	
DRG.CHKD		
APPROVED		
	SIGN	DATE

TITLE

CHEQUERED PLATE

SATISH DHAWAN SPACE CENTRE
SHAR CENTRAL DESIGNS
I.S.R.O SRIHARIKOTA

PROJECTION

SCALE 1:20

DRG. NO. 10-04-200-06-02-062/A1/R1

SHEET 6 OF 7

SCEND/X170/2015/RAGHU/OS

REF. DRG. NO. 10-04-200-06-02-062/A1/R1
COM. FILE NO. SCEND/CH.CHANDU/X177/A1/GUPTA

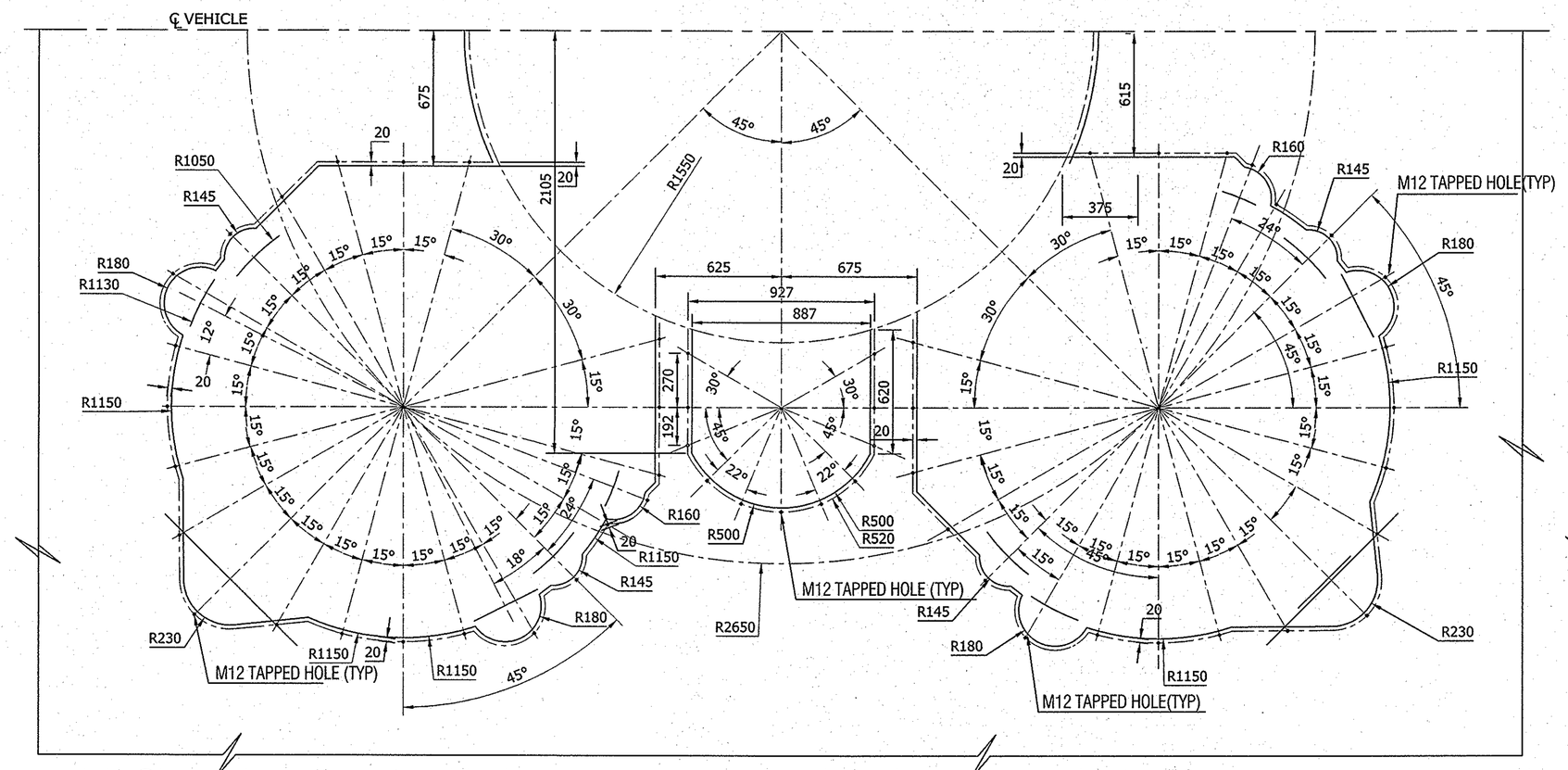

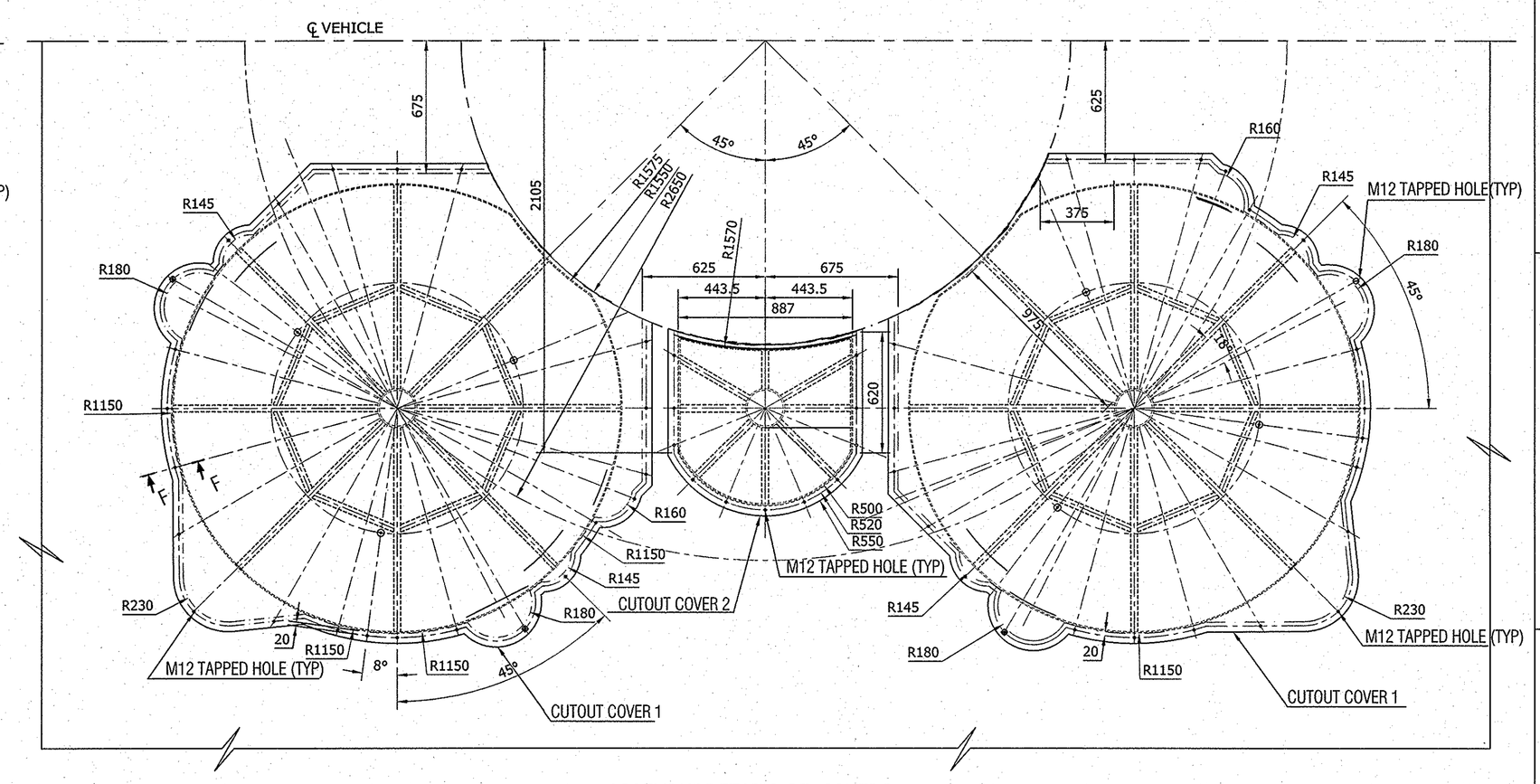

ASSEMBLY DETAILS OF COVERS

GSLV CUTOUT DETAILS IN THE CHEQUERED PLATE

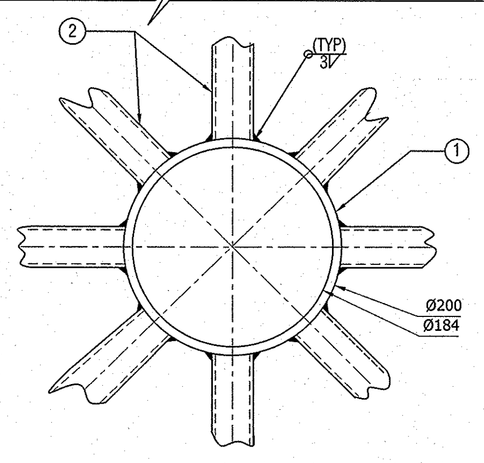

DETAIL-A
(WITH OUT CHQ-PLATE)

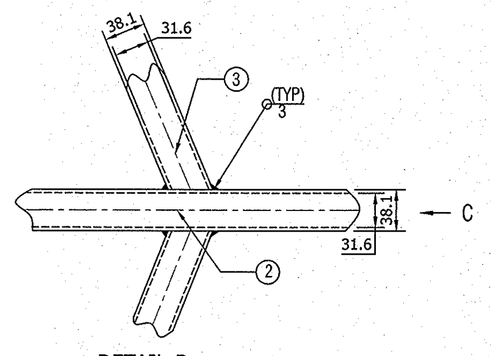

DETAIL-B

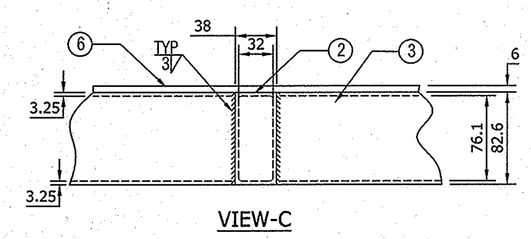

VIEW-C

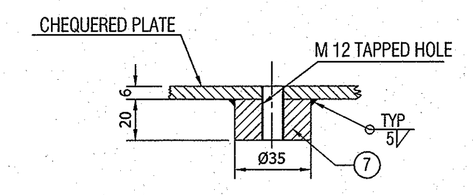

SECTION : D D(TYP)

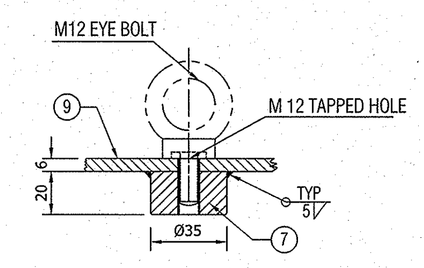

SECTION: D D WITH EYE BOLT(TYP)
(FOR HANDLING PURPOSE)

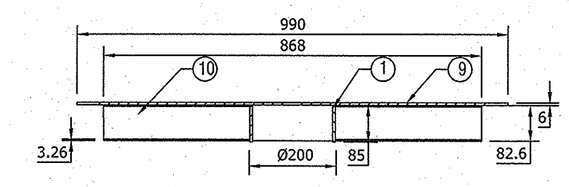

SECTION E E

STATUS	SIGN.	DATE
FOR DISCUSSION		
FOR TENDER		
FOR FABRICATION		6/11/15

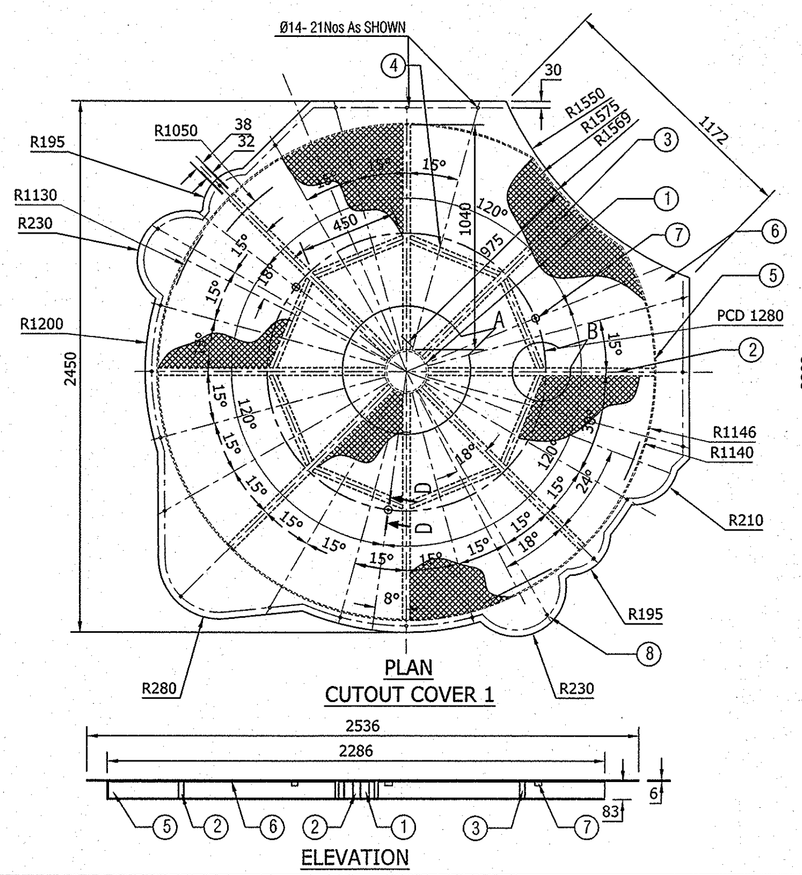

PLAN
CUTOUT COVER 1

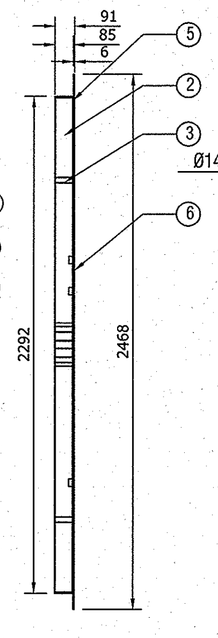

SIDE VIEW

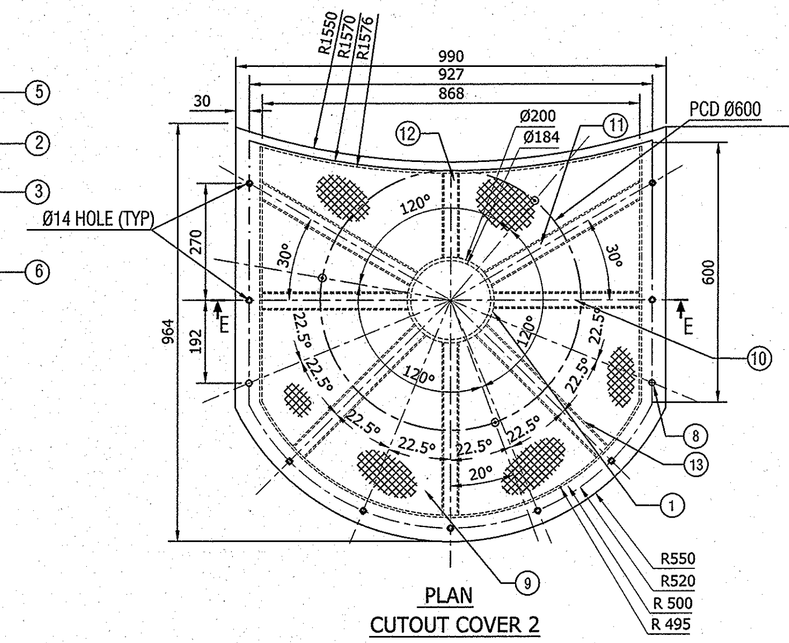

PLAN
CUTOUT COVER 2

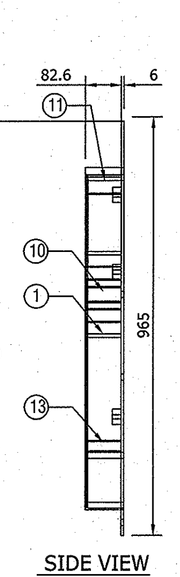

SIDE VIEW

ELEVATION

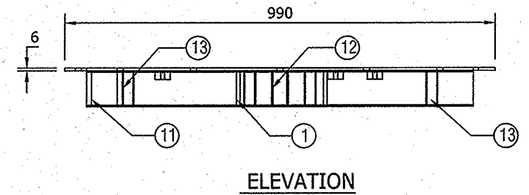

ELEVATION

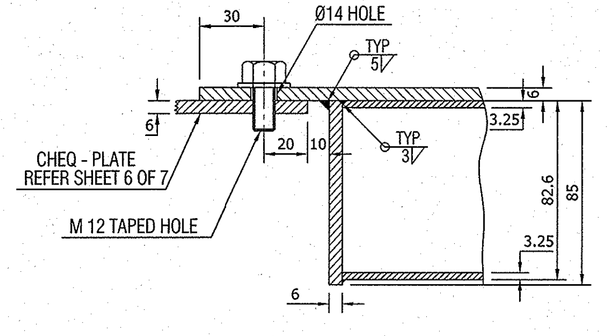

SECTION : F F (TYP)

TOTAL WEIGHT 400 Kg (APPROX)

	S.NO	DESCRIPTION	MATERIAL	QTY	W.T	REMARKS
CUTOUT COVER 2	13	RECTANGULAR HOLLOW TUBE 82.6x38.1x3.25 Thk - 395 Lg	IS :736	3	2.5	JINDAL ALUMINIUM SECTIONNO.14007
	12	RECTANGULAR HOLLOW TUBE 82.6x38.1x3.25 Thk - 195 Lg	IS :736	1	0.5	JINDAL ALUMINIUM SECTIONNO.14007
	11	RECTANGULAR HOLLOW TUBE 82.6x38.1x3.25 Thk - 415 Lg	IS :736	2	2	JINDAL ALUMINIUM SECTIONNO.14007
	10	RECTANGULAR HOLLOW TUBE 82.6x38.1x3.25 Thk - 336 Lg	IS :736	2	1.5	JINDAL ALUMINIUM SECTIONNO.14007
	9	CHEQUERED PLATE 995x990x6 Thk	IS :736	1	120	ALUMINIUM
	8	M 12 HEX BOLT 20 Lg	IS :1367	57	–	
	7	ALUMINIUM Ø35 ROD 20 LG	IS :736	7	0.5	ALUMINIUM
CUTOUT COVER 1	6	CHEQUERED PLATE 2535x2450x6 Thk	IS :736	2	201	ALUMINIUM
	5	ALUMINIUM PLATE 7180x85x6Thk	IS :736	2	20	ALUMINIUM
	4	RECTANGULAR HOLLOW TUBE 82.6x38.1x3.25 Thk - 450 Lg	IS :736	16	14.5	JINDAL ALUMINIUM SECTIONNO.14007
	3	RECTANGULAR HOLLOW TUBE 82.6x38.1x3.25 Thk - 975Lg	IS :736	2	4	JINDAL ALUMINIUM SECTIONNO.14007
	2	RECTANGULAR HOLLOW TUBE 82.6x38.1x3.25 Thk - 1040 Lg	IS :736	14	29.5	JINDAL ALUMINIUM SECTIONNO.14007
	1	ROUND TUBE OD Ø200x 8Thk - 85 Lg	IS :736	3	3.3	JINDAL ALUMINIUM SECTIONNO.13404

NOTE:

1. ALL THE DIMENSIONS SHOWN ARE THE FINISHED DIMENSIONS.
2. ALL WELDS ARE OF 3mm SIZE FILLET UNLESS OTHERWISE SPECIFIED.
3. ALL WELD JOINTS SHALL BE DP TESTED FOR ROOT AND FINAL PASSES TO ENSURE WELD QUALITY.
4. THE QUANTITY OF CUTOUT COVER -1 REQUIRED IS 4 Nos. OF EXACTLY SIMILAR IN DIMENSIONS.
5. THE QUANTITY OF CUTOUT COVER -2 REQUIRED IS 2 Nos. OF EXACTLY SIMILAR IN DIMENSIONS.
6. CHECK THE STATUS OF THE DRAWING BEFORE STARTING FABRICATION.

DO NOT SCALE THE DRAWING
ASK IF IN DOUBT
UNLESS OTHERWISE SHOWN
ALL DIMENSIONS ARE IN MILLIMETERS
REMOVE SHARP EDGES & BURRS
CHAMFER 1 M.M. X 45°
MACHINING FINISH IN MICRONS :-
▽ 8 - 25 ▽▽ 1.6 - 8
▽▽▽ 0.025 - 1.6 ▽▽▽▽ < 0.025

DEVIATION FOR NON TOLERANCED DIMENSIONS (IS -2102)

DIAMETERS & LENGTHS	LENGTH IN M.M. OF SHORTER SIDE OF ANGLE UPTO & INCL.
UPTO & INCL. 6 +0.1	1- 6 + 1°-00 '
6 - 30 +0.2	6- 30 + 0°-30 '
30 - 120 +0.3	30-120 + 0°-20 '
120 - 315 +0.5	120-400 + 0°-10
315 - 1000 +0.8	
1000 - 2000 +1.2	
2000 - 4000 +2.0	
4000 & ABOVE +3.0	

SCEND&ASG

	SIGN.	DATE
DESIGNED		6-11-15
DES.CHKD		
DRAWN	CHANDU	28.10.15
DRG.CHKD		
APPROVED		

TITLE
CUTOUT COVERS

SHAR CENTRAL DESIGNS & ADVANCED SYSTEMS GROUP
SATISH DHAWAN SPACE CENTRE SHAR
I.S.R.O SRIHARIKOTA

PROJECTION

SCALE 1:20
DRG. NO. 10-04-200-06-02-062/A1/R1
SHEET 7 OF 7

SCEND/CH.CHANDU/X177/A1/GUPTA

Page Destination: Tender Header **Format Type :** Normal

. :

GOVERNMENT OF INDIA

DEPARTMENT OF SPACE

SATISH DHAWAN SPACE CENTRE

PURCHASE DIVISION

Tele No.08623-225023/225174/225127
Fax No.08623-225170/22-5028
e-Mail ID : hps@shar.gov.in, hasan@shar.gov.in, sselvan@shar.gov.in

STANDARD TERMS & CONDITIONS

1.OFFERS SHALL BE SENT ONLINE ONLY USING STANDARD DIGITAL SIGNATURE CERTIFICATE OF CLASS III WITH ENCRYPTION / DECRYPTION. THE TENDERS AUTHORISED ONLINE ON OR BEFORE THE OPEN AUTHORISATION DATE AND TIME ONLY WILL BE CONSIDERED AS VALID TENDERS EVEN THOUGH THE BIDS ARE SUBMITTED ONLINE.

2.THE TENDERER MUST AUTHORISE BID OPENING WITHIN THE TIME STIPULATED IN THE SCHEDULE BY SDSC SHAR. OTHERWISE THE ONLINE BID SUBMITTED WILL NOT BE CONSIDERED FOR EVALUATION. PHYSICAL COPY WILL NOT BE CONSIDERED EVEN THOUGH IT IS RECEIVED BEFORE THE BID SUBMISSION DATE.

In case of two-part tenders, parties shall submit their offers as follows:-

1) Part-I – Techno-commercial Bid

(No price details shall be mentioned in this bid and shall not upload the details of price along with the techno-commercial bid)

2) Part-II – Price Bid

In view of Two Part Tender, the Offers submitted contrary to above instructions will be summarily rejected.

3.In case, the tenderer is not interested to participate in the tender, the tenderer shall submit regret letter giving reasons, failing which future enquiries will not be sent.

4.**Offer Validity:** The validity of the offers / tenders should be 90 days (in case of single part tender) and 120 days (in case two part tender) from the date of opening of the tenders. Tenders with offer validity less than the period mentioned above, will not be considered for evaluation.

5.**Excise Duty** - SDSC-SHAR is eligible for Excise Duty Exemption under Notification No. 64/95 dated 16.03.1995 as amended by Notification No. 15/2007 dated 01.03.2007 and as amended by Notification No. 07/2008 dated 01.03.2008 and necessary Exemption Certificate will be provided. No claim, whatsoever, for payment of Excise Duty or Cenvat reversal will be allowed later. The suppliers have to take this into account while submitting quotations.

Excise Duty Exemption Certificte will be issued only to finished product as per the PO/Contract. EDEC shall not be issued in favour of third parties for raw materials, other components that go in to the manufacture of the end product.

Excise Duty Exemption Certificate will be issued in favour of original equipment manufacturer provided (i) the tender has been received from the sole selling agent of OEM concerned (for which documentary proof shall be produced) and (ii) a request for issue of Excise Duty Exemption Certificate was made in the original offer itself.

6.**CST** - With effect from 01.04.2007, Form-D has been withdrawn for Inter-State purchases by Government Departments. Now the percentage of CST on the Inter-State sales to Government Departments shall be the percentage of VAT/State Sales Tax as applicable in the State of the Seller/Dealer. Accordingly, the suppliers have to indicate clearly the % (full rate of tax) of CST applicable against each item in their offers.

7.**Customs Duty** - SDSC-SHAR is eligible for 100% Customs Duty exemption as per Notification No. 12/2012 dated 17.03.2012. This may be taken into account while quoting for import items, if any.

In case tenderers offering items considering customs duty exemption, they should also indicate the bill of materials and price, separately, with Customs Duty component and terms and conditions thereto.

8.**Advance Payment** - Wherever advance payment is requested, Bank Guarantee from any Nationalized Bank/Scheduled Bank should be furnished. In case of advance payments, if the party is not supplying the material within the delivery schedule, interest will be levied as per the Prime Lending Rate of RBI plus 2% penal interest.

Interest will be loaded for advance payments/stage payments as per the prime lending rate of RBI and will be added to the landed cost for comparison purpose. In case of different milestone payments submitted by the parties, a standard and transparent methodology like NPV will be adopted for evaluating the offers.

9.**Liquidated Damages** - In all cases, delivery schedule indicated in the Purchase Order/Contract is the essence of the contract and if the party fails to deliver the material within the delivery schedule, Liquidated Damages will be levied @ 0.5% per week or part thereof subject to a maximum of 10% of total order value.

10.**Performance Bank Guarantee** - Performance Bank Guarantee for 10% of the order value should be furnished in the form of Bank Guarantee from nationalized/scheduled bank or by Demand Draft valid till warranty period plus sixty days as claim period.

11.**Security Deposit** – Security Deposit for 10% of the order value is mandatory, if the ordered value is Rs.5.00 lakhs and above. Party

shall furnish the Security Deposit in the form of Bank Guarantee from nationalized/scheduled bank or by Demand Draft valid till completion of the contract period plus sixty days towards claim period for faithful execution of the contract.

12.**BANK GUARANTEE FOR FIM:** Supplier has to submit Bank guarantee for equal value of Free Issue of Materials (FIM) issued by the Department from Nationalised / Scheduled Bank valid till receipt and acceptance of supply and satisfactory accounting of FIM plus sixty days as claim period.

13.The delivery period mentioned in the tender enquiry, IF ANY, is with the stipulation that no credit will be given for earlier deliveries and offers with delivery beyond the period will be treated as unresponsive.

14.The Department will have the option to consider more than one source of supply and final orders will be given accordingly.

15.The bidders should note that conditional discounts would not have edge in the evaluation process of tenders.

16.Non-acceptance of any conditions wherever called for related to Guarantee/ Warranty, Performance Bank Guarantee, Security Deposit, Liquidated damages are liable for disqualification.

17.Wherever installation/ commissioning involved, the guarantee/warrantee period shall reckon only from the date of installation and commissioning.

18.Purchase/Price Preference will be extended to the MSMEs under the Public Procurement Policy for MSMEs formulated under the Micro, Small and Medium Enterprises Development Act, 2006 and instructions issued by Government of India from time to time. Vendors who would like to avail the benefit of MSME should clearly mention the same and submit all the documentary evidences to substantiate their claim along with tender itself.

19.The drawings, specifications, end use etc., given by the Centre/Unit along with the tender enquiry are confidential and shall not be disclosed to any third party.

20.**SPECIAL CONDITIONS FOR SUBMITTING QUOTATIONS IN FOREIGN CURRENCY BY THE INDIAN AGENTS**

The Tenderer should submit the following documents/information while quoting:-

a)Foreign Principal's proforma invoice/quote indicating the commission payable to the Indian Agent and nature of after sales service to be rendered by the Indian Agent.

b)Copy of Agency agreement with the Foreign Principal and the Indian Agent, precise relationship between them and their mutual interest in the business.

c)Registration and item empanelment of the Indian Agent.

d)Agency Commission will be paid only Indian Currency.

e)Compliance of the tax laws by the Indian Agent.

21. **High Sea Sales**- Against High Sea Sale transactions:

a.Offers shall be on all inclusive basis including delivery upto Sriharikota at the risk and cost of the supplier. Customs Clearance is the responsibility of the supplier and at his cost and risk.

b.100% payment will be made within 30 days after receipt and acceptance of the items at our site.

c.Sales Tax is not applicable

d.Customs Duty Exemption Certificate and other relevant documents required for Customs clearance will be provided.

e.High Sea Sales Agreement furnished by the supplier in accordance with the terms and conditions of our purchase order will be signed and issued by SDSC-SHAR.

22.The following information/ documents are to be submitted wherever applicable.

1.Product Literature

2.Core banking account number of SBI, RTGS Details

3.PAN No. in quotation and invoices

4.Excise Duty, VAT, Service Tax Registration details.

5.In case of MSME, registration details / documents from Competent Authority.

23.**EXCLUSION OF TENDERS**

The following tenders shall be summarily rejected from the procurement process

a.Tenders received from vendors who have not qualified in terms of their registration.

b.Tenders received against publishing of a limited tender in the CPP portal.

c.Tenders of vendors who have been removed from the vendor list or banned/debarred from having business dealings.

d.Unsolicited tenders from vendors.

e.The tenders which materially depart from the requirements specified in the tender document or which contain false information.

f.The tenders which are not accompanied by the prescribed Earnest Money Deposit.

g.The tenders of vendors who have not agreed to furnish Security Deposit, Performance Bank Guarantee and Liquidated Damages.

h.The validity of the tenders is shorter than the period specified in the tender enquiry.

i.The tenders received from vendors or their agents or anyone acting on their behalf, who have promised or given to any official of the Centre/Unit/Department, a gratification in any form, or anything of value, so as to unduly influence the procurement process.

j.The tenders received from vendors, who, in the opinion of the Centre/Unit, have a conflict of interest materially affecting fair competition.

k.The tenders received from Indian agents on behalf of their foreign Principals/OEMs (in cases where the Principals/OEMs also submit their tenders simultaneously for the same item/product in the same tender).

l.In case two or more tenders are received from an Indian agent on behalf of more than one foreign Principal/OEM, in the same tender for the same item/product.

m.If a firm quotes 'NIL' charges / consideration, the bid shall be treated as un-responsive and will not be considered.